Hamilton Manufacturing Corporation

1026 Hamilton Dr. Holland, OH 43528 • Phone: 419-867-4858/800-837-5561 • Fax: 419-867-4867 • www.hamiltonmfg.com

Gold Line® ACW Operational Manual

Document #101-0041 7/16/04

TABLE OF CONTENTS

APPENDICES

ABOUT THIS MANUAL

PLEASE READ THIS MANUAL CAREFULLY PRIOR TO INSTALLING THIS UNIT. A complete understanding of the operation of this unit is essential for a successful installation. Refer to the Table of Contents for easy navigation through this manual.

This manual was designed to introduce the Gold Line® Autocashier and to provide general information about operation, installation and maintenance. This manual will enable the operator to program the GL-ACW, perform audits, detect error codes and perform basic troubleshooting procedures. Also included are pre-programmed factory settings, Item Names and Welcome Messages, as well as a Tokenote® Training Guide for use with the optional Tokenotes®. Basic information is provided for the hopper, stacker and validator. However, if additional information is needed for these components, refer to the appropriate manual. To obtain assistance from the manufacturer, please call (800) 837-5561 or (419) 867-4858. Or contact Hamilton Mfg. online @ http:\\www.hamiltonmfg.com.

When calling for assistance, it is important to have serial numbers readily available. Please record these numbers in the spaces provided.

GL-ACW MODEL & SERIAL #_____

CONTROLLER MODEL & SERIAL #_____

HOPPER MODEL & SERIAL #_____

STACKER MODEL & SERIAL #_____

VALIDATOR MODEL & SERIAL #_____

LOCK/KEY #_____

EIC SERIAL #_____

Please complete the warranty card, which was included with your machine, and return it to the manufacturer.

I. INTRODUCTION

The many benefits offered by the GL-ACW automated car wash system include:

- Reduced personnel, and thus lower payroll.
- Increased security by eliminating the "silent partner" employee theft problem.
- Increased operating time as a result of a tireless customer interface that is capable of working 24 hours per day.

Features:

- A large, bright character display that welcomes customers and guides them through their transactions.
- It allows customers to select and pay for one of four possible washes, returning change if necessary.
- The GL-ACW has the ability to process a second customer's transaction while the first customer is still in the bay receiving a wash. This eliminates long waits and increases revenue and customer satisfaction.
- The GL-ACW is capable of accepting Hamilton Tokenotes®. Tokenotes® are paper tokens that are inserted into the Hamilton HVX, XE or STA Validator like dollar bills and used as credit towards the desired car wash selection.
- An Audible Voice that is used to provide feedback to customers to help guide them through transactions.
- An Out of Service Relay used to signal an auto-dialing modem to contact the owner if the unit shuts down. (Only the signaling relay is provided. The auto-dialer is not included.)
- An environmental control unit to help protect against the elements.
- Newly designed Relay Panel that includes a Ground Fault Circuit Interrupter.
- Universal harnessing and door for ease of adding options.

Options:

- The Data Access Network, otherwise known as D.A.N. is your key to increasing profitablity and customer loyalty. With a D.A.N. and a high speed internet connection, your Gold Line Autocashier can process credit cards at a much faster rate. D.A.N. also allows you to accept the Hamilton Customer Value Cards which are a great marketing tool giving your customers another reason to return to your location.
- An External Display featuring a 3" x 18" display area. The External Display is used to display customized messages and to guide customers through transactions by displaying instructions in a large, bold fashion.
- Using the optional *Hamilton Gold Link* software the Prices, Coupon Values, Welcome and External Display messages can be programmed to change automatically at a predetermined time. This time sensitive event feature gives the GL-ACW up to seven prioritized events that can change the above programming categories based on the time of day, day of the week, or a specific date all triggered from a built-in clock calendar.
- Preformed bases that place the GL-ACW at the factory recommended height for various mounting situations.

- A Lighted Hood, which is recommended if the ACW is mounted on a base.
- A hand-held printer used to receive a hard copy of all the audit information collected by the GL-ACW.
- A receipt printer to offer customers a hard copy of their transaction. This can also be used to print an audit report.
- A credit card acceptance system that gives the capability of accepting all major credit cards.
- The POS 4000 unit allows the operator to issue coded tickets for washes, discounted washes or fleet accounts. It also features pay-at-pump capabilities.
- A variety of bill acceptors. Choose from the Hamilton STA or XE or a Coinco® or Mars® Validator. Tokenote® acceptance is available in the Hamilton STA or XE Validators only.

II. INSTALLATION

★ **NOTE:** It is very important to read and understand all of these instructions before attempting installation. **Hamilton will not be responsible for injury due to improper installation.**

The installation process contains two distinct operations, **Mechanical Installation**, and **Electrical Installation**

MECHANICAL INSTALLATION

❑ Unpacking

There are a number of points to keep in mind while unpacking your GL-ACW. These items will make the installation and continued operation of your machine run smoother. These tips are listed below.

Be sure to save your keys

The keys and lock inserts are placed inside a small cloth bag, then packaged in a cushioned envelope and attached to the outside of the machine. When removing the shrink-wrap, be sure to locate the bag containing the keys and set it aside so it does not get thrown away. MAKE A PERMANENT RECORD OF THE NUMBERS ON YOUR KEYS IN CASE A KEY IS LOST AND MUST BE REORDERED.

Remove the packing strap from the hopper

The hopper comes shipped with a packing strap secured around it to minimize the vibrations caused by shipping. If this strap is not removed, the hopper will not tip out for easy filling. The strap may be cut off with a pair of wire cutters or sturdy scissors. Cardboard is placed around the edges of the hopper to protect it during shipping. After removing the strap, be sure to remove the cardboard as well.

Remove all packing debris from the hopper

During unpacking, ensure that debris does not fall into the hopper bowl. If this material is not removed, the hopper could jam. With the power completely disconnected, remove all loose material inside the hopper bowl.

Fill hopper with coins

Before powering up the machine for the first time, it is recommended that the hopper be filled with coins. In order for the hopper to dispense coins, there must be enough coins in the hopper bowl to touch the two sensing plates located at the bottom of the bowl. Otherwise, the hopper will register as empty.

❑ Positioning

There are no set guidelines for the placement of the GL-ACW. However, it is recommended that the machine is positioned far enough away from the wash entrance to minimize the amount of overspray that may get into the GL-ACW. Also, there is a typical height, from the pavement to the bottom of the cabinet, of approximately 26".

❑ Mounting

It is recommended that the GL-ACW be mounted in a permanent enclosure. Safety is a primary concern, so the equipment must be securely mounted. Hamilton recommends using one of the following methods:

- The first method is to construct a small brick or concrete kiosk that will house the Autocashier. Figure 2-1 gives the GL-ACW mounting hole locations. Have your engineer or contractor recommend construction suitable for strength and stability.
- The other method involves mounting the GL-ACW on an optional ACW Base described in the INTRODUCTION section. In this situation, the base is secured to the pavement and the GL-ACW is secured to the base. Fasteners to be used should be recommended by your engineer as to strength and suitability. If this method is chosen, it is strongly recommended that the optional ACW Lighted Hood be installed. This addition serves to better insulate the GL-ACW from harsh environmental conditions as well as offering an attractive lighted top. Contact Hamilton Mfg. for installation instructions for the ACW Lighted Hood.

❑ Running Conduit

Typical electrical code requires low and high voltage wiring to be run in separate conduits. Because of this, the GL-ACW has three ¾" conduit mounting holes in the back of the cabinet, as well as two ¾" and one ½" conduit holes in the bottom of the cabinet. These bottom holes are matched with identical holes in any of the optional ACW Bases offered by Hamilton Mfg.

NOTE: At least one bottom hole must remain unused at all times.

- Conduit carrying high voltage 120VAC power lines, as well as any signal lines containing 120VAC, should be connected to the bottom left conduit hole, as viewed from the front of the machine.
- Conduit carrying lines with 24VAC, 24VDC, 12VAC or 12VDC signals should be connected to the bottom right conduit hole, as viewed from the front of the machine.
- If any external communication lines (telephone, POS etc.) are used, they should be run through separate conduit and connected to the top conduit opening.

Figure 2-1 Mounting Details

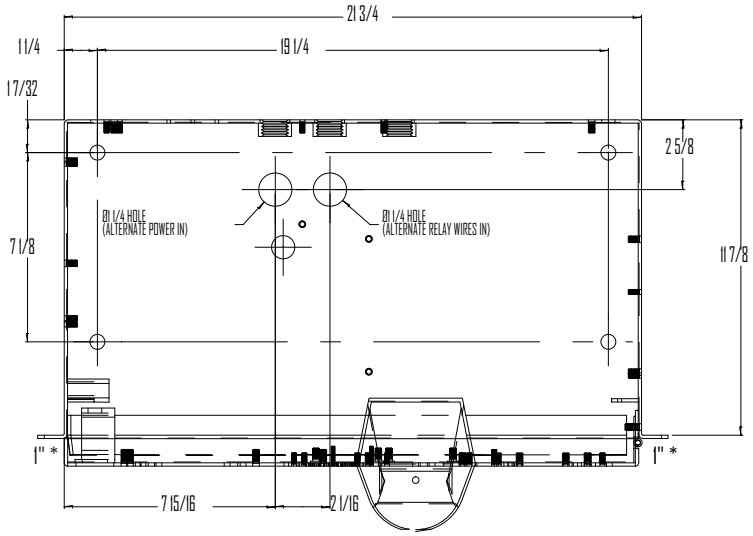

(TOP VIEW SHOWN WITH TOP REMOVED FOR CLARITY)

* Flange extends 1" from edge of cabinet.

NOTE: When using the conduit holes in the back of the cabinet, please leave room in the kiosk for accessibility.

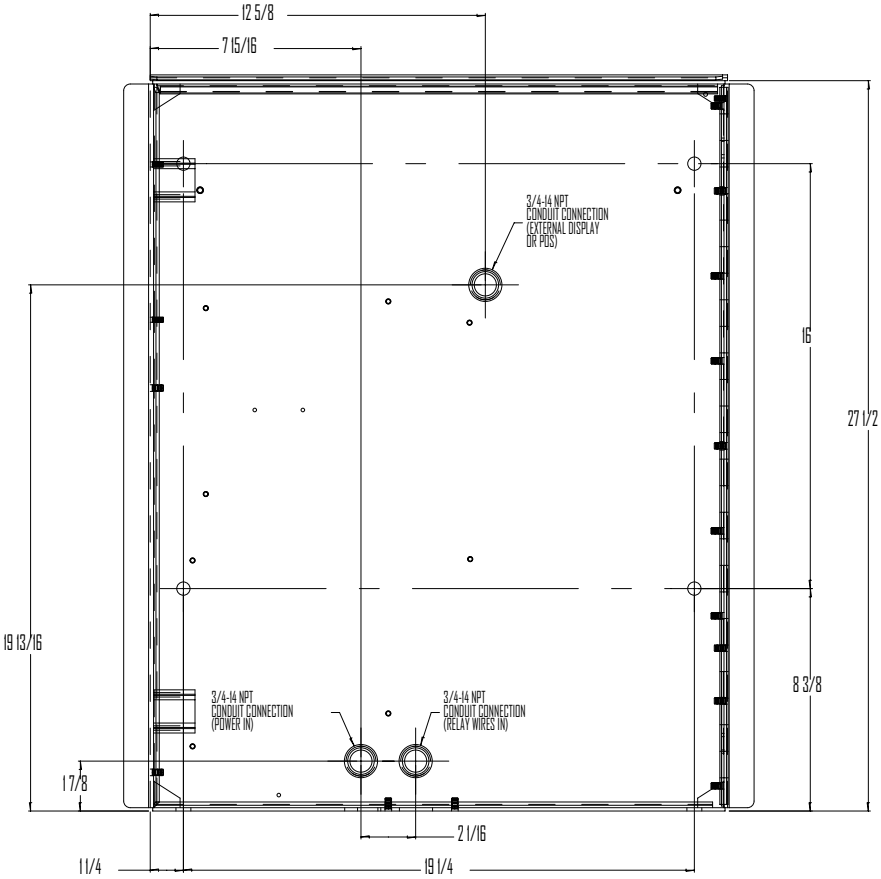

(FRONT VIEW SHOWN WITH DOOR REMOVED FOR CLARITY)

ELECTRICAL INSTALLATION

CAUTION! TO AVOID SEVER INJURY OR DEATH, ALWAYS DISCONNECT POWER TO THE MACHINE WHEN SERVICING!

This Autocashier operates on 120 VAC, 60 Hz. This unit uses a 5 AMP Circuit Breaker. This unit needs to be hard-wired with conduit. A **Ground Fault Interrupter** is included with the GL-ACW.

❑ Pulling Wires

The number of wires needed to be pulled for the GL-ACW system is shown below:

Three Wires	Electrical Power (Hot, Neutral and Ground)
Five Wires	4 for Washes, 1 common*
Two Wires	Cycle Inhibit
Spare Wires	For Future Options

*It is also acceptable to run pairs with individual returns.

For proper operation of the GL-ACW, all wires listed above must be pulled and terminated as explained in the following section.

❑ Wire Terminations

The wire terminations should proceed as follows:

- One side of the three power supply wires (120VAC HOT, 120VAC NEU, and 120VAC GND) should be attached directly to the electrical service panel supplying power to the installation. They should be connected to a 15 AMP circuit breaker and the GL-ACW should be the only device on this circuit. The other end of these three wires should be routed into the GL-ACW through the installed conduit. The wires should be terminated as follows:
    - **L1 (HOT) to terminal C1**
    - **L2 (NEU) to terminal C2**
    - **G (GROUND) to terminal C3.**
- The ITEM 1 wire pair (ITEM 1 SIGNAL and ITEM 1 RETURN) is used to signal the wash controller that a customer has completed a transaction and has selected the Wash #1 sequence. The signal presented to the car wash controller is a normally open, dry contact relay closure. In the GL-ACW, connect one end of this pair to terminals A1 and A2 on the Relay Panel terminal block. Refer to your car wash controller literature for proper connections on the other end of this pair.
- The ITEM 2 wire pair (ITEM 2 SIGNAL and ITEM 2 RETURN) is used to signal the wash controller that a customer has completed a transaction and has selected the Wash #2 sequence. The signal presented to the car wash controller is a normally open, dry contact relay closure. In the GL-ACW, connect one end of this pair to terminals A3 and A4 on the Relay Panel terminal block. Refer to your car wash controller literature for proper connections on the other end of this pair.

- The ITEM 3 wire pair (ITEM 3 SIGNAL and ITEM 3 RETURN) is used to signal the wash controller that a customer has completed a transaction and has selected the Wash #3 sequence. The signal presented to the car wash controller is a normally open, dry contact relay closure. In the GL-ACW, connect one end of this pair to terminals A5 and A6 on the Relay Panel terminal block. Refer to your car wash controller literature for proper connections on the other end of this pair.
- The ITEM 4 wire pair (ITEM 4 SIGNAL and ITEM 4 RETURN) is used to signal the wash controller that a customer has completed a transaction and has selected the Wash #4 sequence. The signal presented to the car wash controller is a normally open, dry contact relay closure. In the GL-ACW, connect one end of this pair to terminals B1 and B2 on the Relay Panel terminal block. Refer to your car wash controller literature for proper connections on the other end of this pair.
- The CYCLE/INHIBIT pair is used for the car wash controller to signal the GL-ACW when a car has completed its wash and has left the bay. The signal coming from the car wash controller must be able to energize the coil of a relay on the Relay Panel. This means that the car wash controller is supplying both voltage and current when it energizes the coil. Inside the ACW, the wiring connections depend on the signal provided by the car wash controller. The CYCLE/INHIBIT pair should be connected directly to the terminal block of the Relay Panel. The proper connection will have one wire of this pair connected to terminal C5 of the Relay Panel (it doesn't matter which one) and the other wire of the pair connected to terminal C6.
- The OUT-OF-SERVICE RELAY is included in the GL-ACW. Terminals B3 (common), B4 (normally open) and B5 (normally closed) are supplied as well. If an error occurs that causes the GL-ACW to go out of service, the relay will be activated.

❑ Additional Wire Terminations For Use With The Credit Card System

The installation of the machine should proceed as outlined in the above section. However, if a Credit Card System is being used, the following must be performed, as well.

- The telephone line used for the ACW must be a dedicated line. No other telephones or equipment can be connected with the same line. (**The use of line splitters is not permitted**.) If more than one machine is to be installed at the same location, a dedicated phone line must be run to each machine.
- The telephone line should be run in a separate conduit. If any other wiring is run in the same conduit, communication problems could occur.

❑ Setting Car Wash Cycle Synchronization Switch

The Car Wash Cycle Synchronization Switch is the silver toggle switch located on the Relay Panel. The proper setting of this switch depends on the equipment used in your car wash system. If the car wash equipment normally leaves the CYCLE/INHIBIT RELAY de-energized while in standby, and then energizes the relay when the customer enters the bay, this switch should be set to PASSIVE (see Figure 2-2). If the reverse occurs, where the car wash equipment normally energizes the CYCLE/INHIBIT RELAY while in standby, then de-energizes the relay when the customer enters the bay, the switch should be set to ACTIVE (see Figure 2-3).

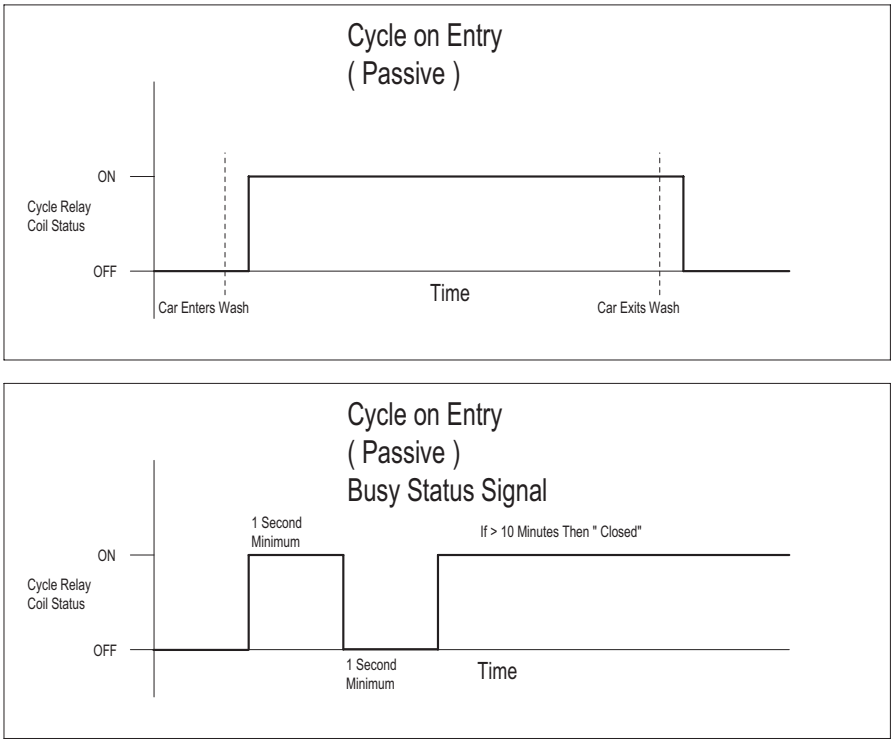

Figure 2-2

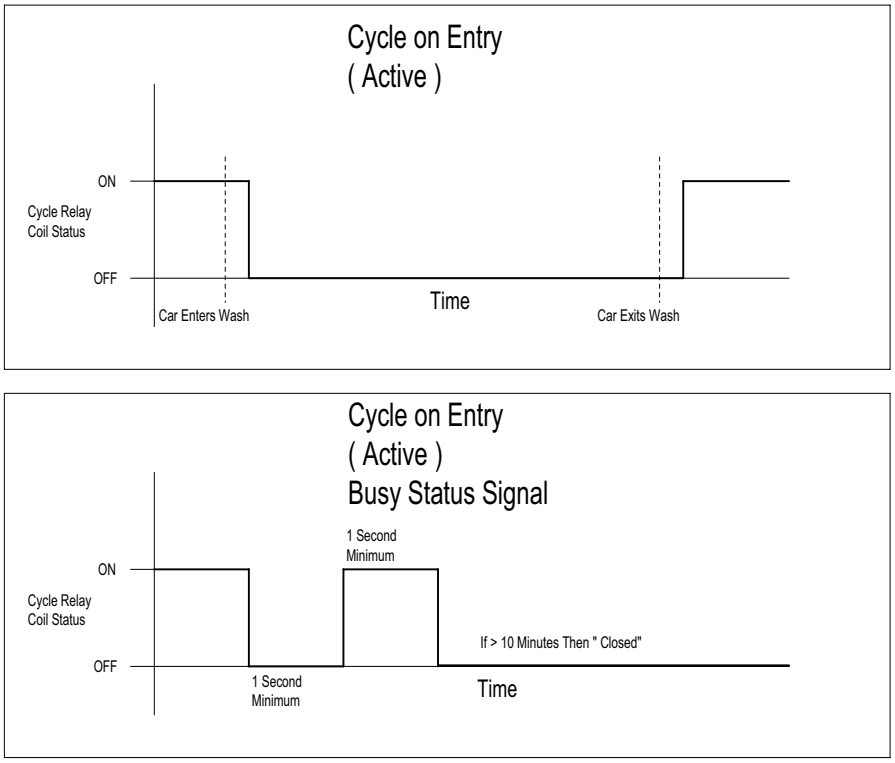

Figure 2-3

❑ General Test

After completing all of the steps under **Mechanical** and **Electrical Installation**, be sure to test the following items for proper function.

- Turn on power at the Relay Panel.
- Be sure to test all facets of the operation, including the bill acceptor and coin acceptors.
- Test for proper wash actuation and Cycle/Inhibit control.
- Ensure that coins are being dispensed for both change and as a refund. If there are any problems refer to the TROUBLESHOOTING section or contact Hamilton Mfg.

Figure 2-4 Relay Panel

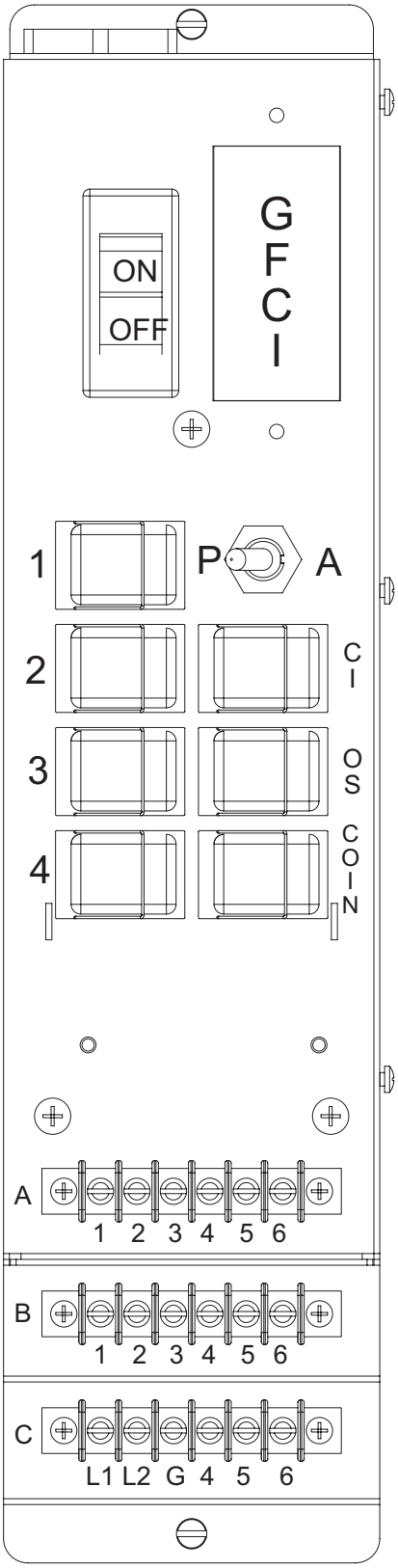

III. OPERATION

NORMAL OPERATION

When a customer drives up to the Autocashier, they are greeted by a bright display that welcomes and/or instructs them on how to proceed. At this point, the customer is able to do one of two things:

1. The customer may first select the wash desired by pressing one of the four wash selection buttons.
   a. The display will alternate between the name of the wash selected and the amount of money to be deposited.
   b. The message will remain until the wash has been paid for in full, with the amount displayed being updated after each deposit.

2. Or the customer may begin by depositing money, tokens, credit cards or Tokenotes®, depending on the machine, to be used towards an upcoming wash selection.
   a. The display will change to a constant message that shows the amount of credit that has been accumulated.
   b. The customer must select one of the four wash selections.

Once the customer has made a wash selection and has deposited enough credit in money, tokens, credit or Tokenotes® to pay for the wash, the transaction is complete. At this point, the GL-ACW will:

- Return any necessary change.
- Activate one of the four function relays to signal the car wash controller that a wash should begin.
- Signal the driver to proceed with the wash by displaying the Proceed Messages.
- After several seconds of displaying the message, the display will return to the sequencing Welcome Messages and the system prepares for the next transaction.

STACKING WASHES

If a second customer pulls up and initiates a transaction while another customer is in the wash bay receiving a wash, the previous operation differs slightly. This situation is known as “STACKING WASHES”.
The operation for the STACKED WASH is listed below:

1. The customer pulls up and views the Welcome Messages.
2. The customer:
   a. Deposits money, tokens, credit cards or Tokenotes®, or
   b. Makes a wash selection
3. The customer completes the transaction by:
   a. Making a selection, or
   b. Depositing enough credit in money, tokens, credit or Tokenotes®

At this point, since the previous car is still in the wash bay, the ACW will not display the Proceed Prompts. Instead, the display will show the alternating messages “PLEASE WAIT, CAR WASH IN USE”. These messages will be displayed until the first car leaves the wash bay (the car wash controller will notify the GL-ACW of this by pulsing its cycle/Inhibit Relay). Once the wash bay is empty, the GL-ACW will signal the car

wash as to which wash was selected and display the Proceed Messages. This lets the driver know that it is now okay to proceed into the car wash. After several seconds, the display will return to showing the Welcome Messages in preparation for the next customer.

DISTRIBUTION PANEL

The Distribution Panel is the distribution point for connections to individual components. When removing harnesses from the Distribution Panel, you must first squeeze the release tabs on the connectors. The harnesses are connected as follows:

1	DC Power Supply Input	12	Keypad
2	ACW Controller AC1	13	Sound
3	Hamilton Stacker/Validator	14	Credit Card
4	Relay Pan	15	ACW Internal Display
5	Hopper/24V Transformer Input	16	POS
6	DC Power Supply Output	17	External Serial Interface
7	ACW Controller DC1	18	External Display
8	ACW Controller DC2	19	3rd Party Validator
9	Printer	20	Coin Mechs
10	EIC	21	24V Transformer Output
11	Wash Select Buttons	22	8 Function Wash Select Buttons

A series of red LED's on the Distribution Panel will help in the troubleshooting process. The following is a list of their indications. See Figure 3-1 for a complete diagram of the Distribution Panel.

+12V	Should always be on. If it is off, check AC power supplies and fuses under Hopper as well as GFI.
+5V	Same as above.
$1	Should flash when a $1 or a Tokenote is accepted.
$5	Should flash when a $5, $10, $20 or Tokenote is accepted.
COIN 1	Will flash when a coin is accepted in Coin Mech #1.
COIN 2	Will flash when a coin is accepted in Coin Mech #2.
COIN DROP	Will flash each time a coin is paid out of the Hopper.
HOPPER EMPTY	Will be on steady when Hopper is empty.
BUTTON 1	Will flash when the wash buttons or the refund button is pressed.
BUTTON 2	
BUTTON 3	
BUTTON 4	
REFUND	
EIC TRANSMIT	Flashes as Controller communicates with EIC.
EIC RECEIVE	Flashes as Controller receives signal back from EIC.
CARD READER	Will flash when card is swiped.
SOUND	Will flash when voice is operating.
PRINTER	Will be on steady while report is printing from external printer.

Figure 3-1 Distribution Panel

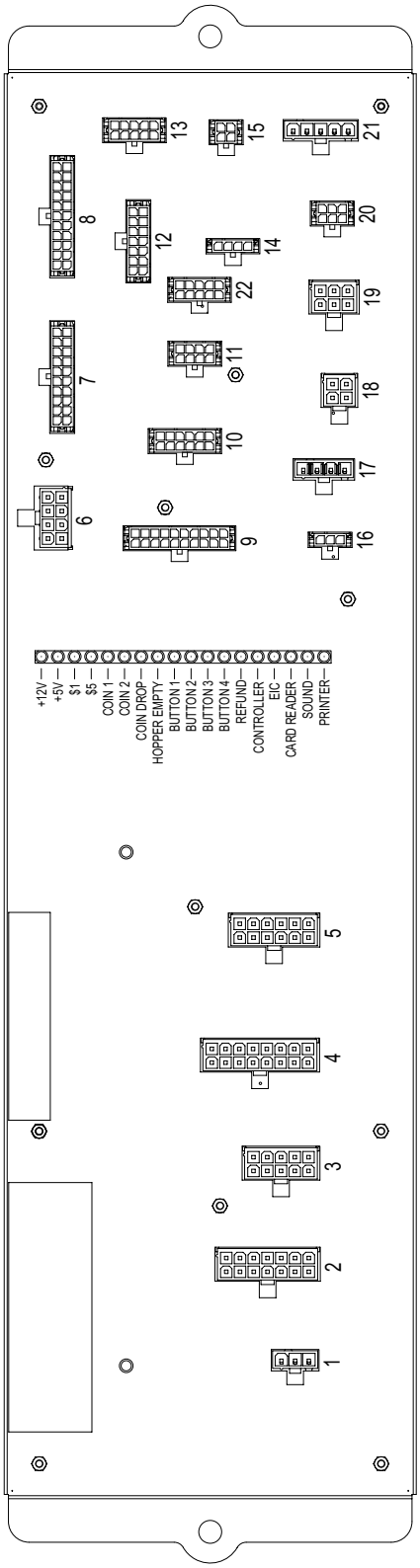

ENVIRONMENTAL CONTROLLER

The Environmental Controller is used to maintain temperature in the GL-ACW. It contains the two replaceable fuses, as well as the thermostat. See Figures 3-2 and 3-3 for illustrations of their locations.

2 Amp Fuse

The 2 amp fuse is on the primary side of two 24VAC transformers that power the coin mechs, external display and 3rd party validators.

5 Amp Fuse

The 5 amp fuse is for the fan and heater.

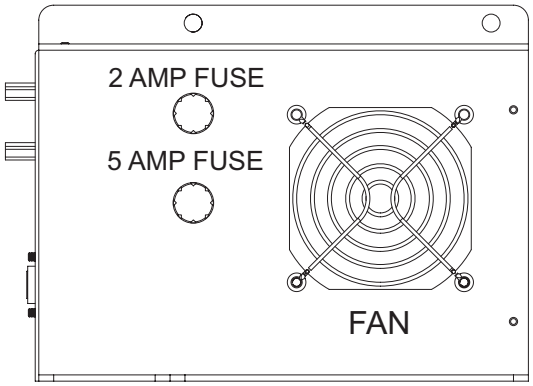

Figure 3-2 Left Side View

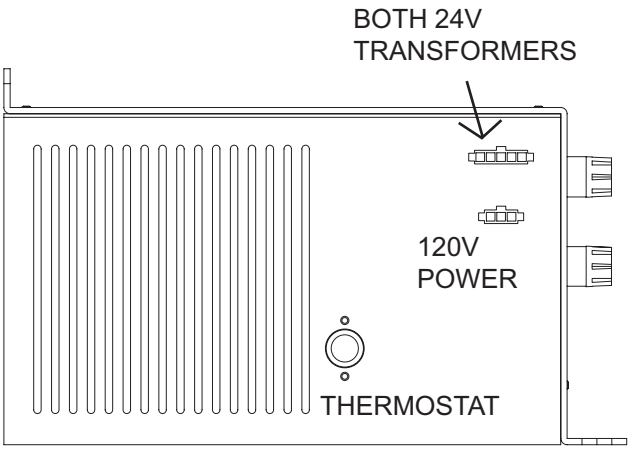

Figure 3-3 Rear View

VOICE PANEL

The GL-ACW's Voice Panel is also located under the hopper.
There are three red LED's on this panel, however only two will be used. The #2 LED indicates the Proximity Signal. It will flash when the sensor signal is being sent to the controller. The #3 LED indicates the Proximity Sensor. It will flash if it is blocked by an object other than a vehicle.
The connectors on the Voice Panel are for the speaker and sound. The harness connected to the bottom terminal should also be connected to the #13 connector on the Distribution Panel (See Figure 3-1). The other connector is for the speaker and the proximity sensors which are located on the door.

Volume Control

To eliminate a voice greeting and instructions, turn the volume completely down by turning the switch counter-clockwise. To turn the volume up, turn the switch clockwise.

Figure 3-4 Voice Panel

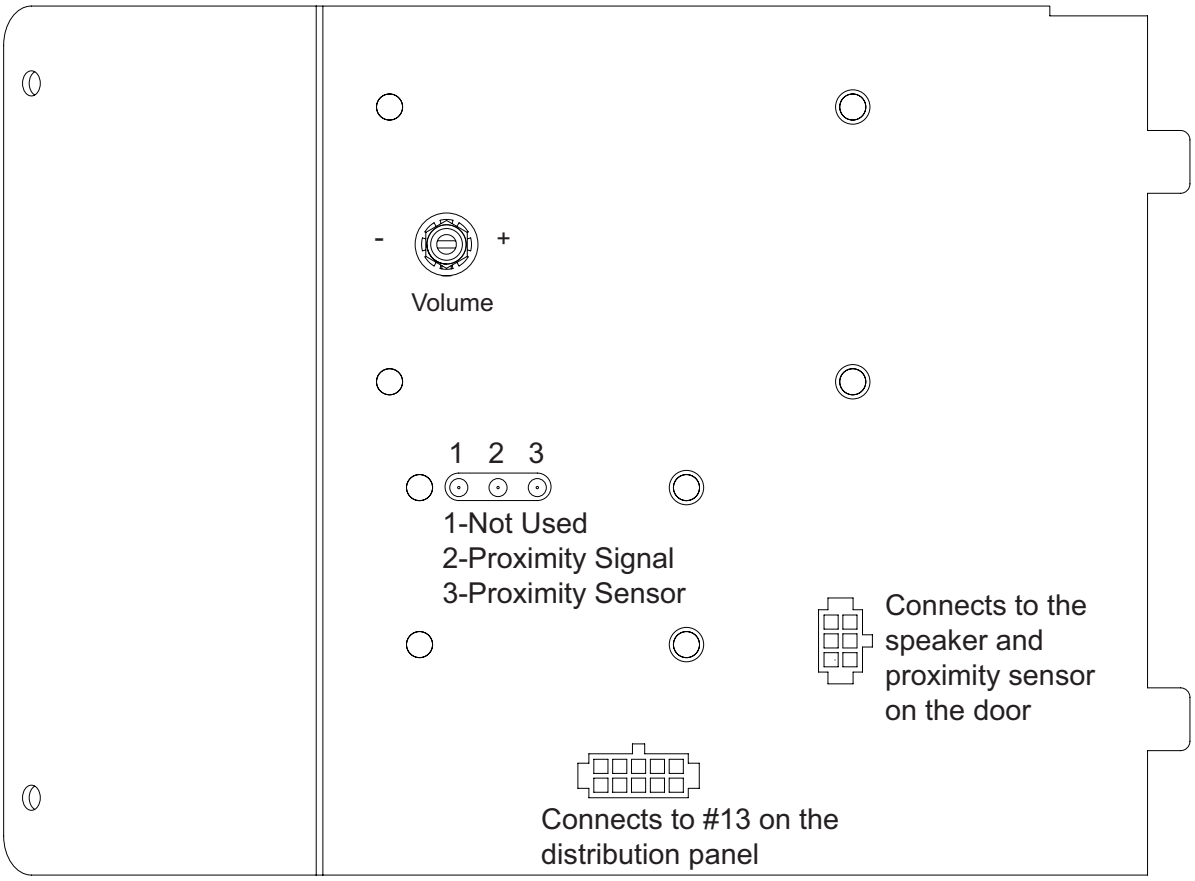

IV. AUDITS

For added security, the GL-ACW contains two complete sets of audits.

The RESETTABLE audit categories include:

- INVENTORY DEPOSITS?
- INVENTORY VENDING?
- INVENTORY OVERPAID?
- AUDIT VAULT COUNT?

Maximum value for these fields before rolling over is 65,535 for counts and $16,383 for dollar amounts.

The NON-RESETTABLE audit categories include:

- TOTAL DEPOSITS?
- TOTAL VENDING?
- TOTAL OVERPAID?
- TOTAL VAULT COUNT?

The information stored is the same for both sets. However, the RESETTABLE AUDITS are values accumulated since the last time the audits were cleared. The NON-RESETTABLE AUDITS contain values accumulated throughout the entire life of the controller while it has been inside the GL-ACW.

For details on how to view the audit information on your GL-ACW, refer to the PROGRAMMING section. (It may be necessary to read the entire section to get a complete understanding of how the controller functions.)

The information stored in each audit is described below.

Inventory and Total Deposits

The DEPOSITS category shows a complete dollar amount of everything deposited into the machine, minus the change returned to the customer. It is broken down into five subcategories, CASH, TOKENS, CODES, PL CARDS and CR CARDS. The CASH deposit subcategory gives a total dollar amount of all $1, $5, $10, $20 bills and quarters deposited. It takes into consideration change that has been returned to the customer, displaying the amount of profit made. The TOKEN deposit subcategory gives a total dollar amount of all Tokenotes® and token coins deposited. The CODES deposit subcategory gives the total dollar amount of credit resulting from the use of a code system. The PL CARDS subcategory gives the total dollar amount of all WashCard®, Hamilton Customer Value Card or other private label card transactions, if applicable. The CR CARDS subcategory gives the total dollar amount of all major credit cards received.

Inventory and Total Vending

The VENDING category gives a complete breakdown of each wash purchased and the method of payment for each wash. It does this by showing the total amount of cash received in payment for each of the four washes as well as the dollar amount of token credit, code credit, private label cards and credit cards received. The VENDING category also takes into consideration the amount of change that has been returned to the customer, displaying the amount of profit made.

Inventory and Total Overpaid

The OVERPAID category totals the amount of change that could not be dispensed to customers. Most frequently, this category is adjusted when the coin hopper is empty and the GL-ACW is operating in the USE EXACT AMOUNT mode. If a customer deposits more than the selected wash price, the difference between the amount deposited and the selected wash price will be added to the overpaid categories.

Audit and Total Vault Count

The VAULT COUNT category gives a complete breakdown of all deposits and cash payouts. It does this by offering specific counts on the number of each denomination bill that has been deposited, the number of each type of Tokenote® deposited, and the number of token coins, debit card approvals and quarters deposited. There is also a count of the number of quarters dispensed as change.

Clear Resettable Inventories

Clearing the RESETTABLE INVENTORIES has the effect of zeroing out all values and counts that have been accumulated since the last time these inventories were cleared. The categories affected are INVENTORY DEPOSITS, INVENTORY VENDING, INVENTORY OVERPAID, and AUDIT VAULT COUNT. The NON-RESETTABLE categories remain unchanged. Refer to the PROGRAMMING section for details on how to clear the inventories.

CONFIGURATION OF AUDIT REPORT

```
************************************
     AUDIT REPORT Unit #1
     FRI 01-23-04 03:52 P
************************************

Item  Name                    Price
----  --------------------    -----
 1    ULTRA WASH              $7.00
 2    SUPER WASH              $6.00
 3    DELUXE WASH             $5.00
 4    BASIC WASH              $4.00

************************************
     CASHIER SALES DATA
     FRI 01-23-04 03:52 P
************************************

Wash 1      Resettable  Perpetual
--------    ----------  ---------
Qty Sold    0           0
Cash        $0.00       $0.00
Tokens      $0.00       $0.00
Codes       $0.00       $0.00
PL Cards    $0.00       $0.00
Cr Cards    $0.00       $0.00
Total       $0.00       $1.00

Wash 2      Resettable  Perpetual
--------    ----------  ---------
Qty Sold    0           0
Cash        $0.00       $0.00
Tokens      $0.00       $0.00
Codes       $0.00       $0.00
PL Cards    $0.00       $0.00
Cr Cards    $0.00       $0.00
Total       $0.00       $0.00

Wash 3      Resettable  Perpetual
--------    ----------  ---------
Qty Sold    0           0
Cash        $0.00       $0.00
Tokens      $0.00       $0.00
Codes       $0.00       $0.00
PL Cards    $0.00       $0.00
Cr Cards    $0.00       $0.00
Total       $0.00       $0.00

Wash 4      Resettable  Perpetual
--------    ----------  ---------
Qty Sold    0           0
Cash        $0.00       $0.00
Tokens      $0.00       $0.00
Codes       $0.00       $0.00
PL Cards    $0.00       $0.00
Cr Cards    $0.00       $0.00
Total       $0.00       $0.00

Totals      Resettable  Perpetual
--------    ----------  ---------
Qty Sold    0           0
Cash        $0.00       $0.00
Tokens      $0.00       $0.00
Codes       $0.00       $0.00
PL Cards    $0.00       $0.00
Cr Cards    $0.00       $0.00
Total       $0.00       $0.00
Overpaid    $0.00       $0.00

Last cleared on FRI 01-23-04 01:26 P

****************************************
     TRANSACTION SUMMARY
     FRI 01-23-04 03:52 P
****************************************

Transaction Resettable  Perpetual
----------- ----------  ---------
 $20 Bill         0           0
 $10 Bill         0           0
  $5 Bill         0           0
  $2 Coin         0           0
  $1 Bill         0           0
  $1 Coin         0           0
  Quarter         0           0
Token Coin 1      0           0
Token Coin 2      0           0
Tokenotes         0           0
#1 Coupons        0           0
#2 Coupons        0           0
#3 Coupons        0           0
#4 Coupons        0           0
  Hopper          0           0
Cr Cards          0           0
PL Cards          0           0
Codes             0           0

****************************************
     RECONCILIATION OF CURRENT CASH
     FRI 01-23-04 03:52 P
****************************************

Bills Deposited         $0.00

Coins Deposited         $0.00
Coins Dispensed         $0.00

Net Coins               $0.00

Cashier Balance         $0.00

End of Audit Report
```

V. PROGRAMMABLE OPTIONS

The GL-ACW has a number of programmable options that can be used by the car wash owner to customize the operation of the machine. These programmable options give the car wash owner the ability to:

- Set the desired prices
- Program custom messages
- Program the amount of credit given for token coins and/or Hamilton Tokenotes®

The following is a description of all of the programmable options, in the order they will be encountered in the PROGRAMMING MODE. For information on how to program these options, refer to the PROGRAMMING section.

Token Coin Mode

There are two choices for the TOKEN COIN MODE, MULTIPLE CREDITS and SINGLE CREDIT. MULTIPLE CREDITS allows the customer to insert as many token coins as necessary to pay for the selected wash. The SINGLE CREDIT MODE, limits the customer to receiving credit for only one token coin per transaction. SINGLE CREDIT MODE is often used when token coins are distributed as a promotion to get customers to choose your car wash for reduced car wash rates. By only accepting one credit per customer, the customer will not be able to accumulate the promotional token coins and receive a free wash. In this mode, you will still be collecting some revenue on every car washed.

Token Coin Values

This category is used to program the amount of credit given when a token coin is accepted by the GL-ACW. The value can be anything from $0.00 to $63.75 programmable in $0.25 increments. Two token coins with different values can be programmed when using an IDX multi-coin acceptor. Programming the IDX to generate one credit pulse when the token is accepted identifies token Coin 1. Programming the IDX to generate three credit pulses when the token is accepted identifies token Coin 2.

Tokenote® Mode

There are two choices for the TOKENOTE® MODE, MULTIPLE CREDITS and SINGLE CREDIT MODE. MULTIPLE CREDITS allows the customer to insert as many Tokenotes® as necessary to pay for the selected wash. The SINGLE CREDIT MODE, on the other hand, limits the customer to receiving credit for only one Tokenote® per transaction. SINGLE CREDIT MODE is often used when Tokenotes® are distributed as a promotion to get customers to choose your car wash for reduced car wash rates. By only accepting one credit per customer, the customer will not be able to accumulate the promotional Tokenotes® and receive a free wash. In this mode, you will still be collecting some revenue on every car washed.

Tokenote® Value

This category is used to program the amount of credit given when the validator accepts a Tokenote® trained without a Training Coupon. The value can be anything from $0.00 to $63.75 programmable in $0.25 increments.

Coupon Mode

There are two choices for the Coupon Mode, Multiple Coupon and Single Coupon. Multiple Coupon allows

the customer to have up to four settable values per coupon. Single Coupon allows the customer to have a single value per coupon.

Tokenote Scenarios

Coupon Mode: Single Value
Tokenote Mode: Multiple Credit

Result: Multiple Coupons per Transaction and Multiple Tokenote per Transaction

Coupon Mode: Single Value
Tokenote Mode: Single Credit

Result: 1 Coupon per Transaction or 1 Tokenote per Transaction

Coupon Mode: Multiple Value
Tokenote Mode: Single Credit

Result: 1 Coupon per Transaction or 1 Tokenote per Transaction

Coupon Mode: Multiple Value
Tokenote Mode: Multiple Credit

Result: 1 Coupon per Transaction and Multiple Tokenote per Transaction

Single coupon mode equals one settable value per coupon.
Multiple coupon mode equals four settable values per coupon

Example: Single coupon mode
Tokenote = 1.25
Coupon 1 = .25
Coupon 2 = .50
Coupon 3 = .75
Coupon 4 = 1.00

Example: Multiple coupon mode
Tokenote: = 1.25

	1	2	3	4
Coupon 1 =	.25	.50	.75	1.00
Coupon 2 =	6.00	0.00	0.00	0.00
Coupon 3 =	1.00	1.00	1.00	1.00
Coupon 4 =	.75	.50	.25	0.00

Coupon Values

This category is used to program the amount of credit given when a Tokenote, trained with one of four Training Coupons (Coupon #1 – 4), is accepted by the validator. If "Multiple" is selected in COUPON MODE, then each coupon can have a separate value for each of the four washes that range from $0.00 to $63.75 programmable in $0.25 increments. If "Single" is selected in COUPON MODE, then each coupon may have only one value. This category can be programmed to change automatically at a predetermined time of day, day of the week, or specific date. To use this time event feature requires *Hamilton Gold Link* software.

Item Prices

This category is used to program the price of each of the four wash selections available on the GL-ACW. The values can be anything from $0.00 to $63.75 programmable in $0.25 increments. This category can be programmed to change automatically at a predetermined time of day, day of the week, or specific date. To use this time event feature requires *Hamilton Gold Link* software.

Item Names

This category is used to assign a wash name to each of the four wash selections. These names may be chosen from a list of pre-programmed names or a custom name may be created. Since it is a built in feature of the GL-ACW to display the wash name and the wash price whenever a wash selection button is pressed, it is recommended that a name be selected for all four washes.

Custom Item Names

This category is used to program a custom wash name for each of the four wash selections. Up to eight different custom names can be programmed.

Proceed Prompts

This category is used to select the sequencing messages that are seen after a customer makes a wash selection and is waiting to proceed into the wash. There are up to four sequencing Proceed Prompts possible. These four messages may be chosen from a list of pre-programmed messages or a custom message may be created. Up to eight different custom messages can be programmed. If a ninth custom message is attempted, it overwrites the first custom message programmed. Once a custom message is programmed, it will be listed along with the pre-programmed messages when scrolling through the available message choices. These custom messages can be deselected or overwritten, but never erased. If you do not wish to use all four messages, simply program the desired messages with the pre-programmed or custom messages and program the remaining messages with the "-NOT USED-" message located in the pre-programmed message list. This message will not appear on the screen. When this message is encountered in the message sequence, it automatically skips to the next message in the sequence without any time delay.

Proceed Prompts Example: To guide a customer through a transaction, the following messages may be selected:

PROCEED MESSAGE #1	"THANK YOU"
PROCEED MESSAGE #2	"PLEASE DRIVE AHEAD"
PROCEED MESSAGE #3	"-NOT USED-"
PROCEED MESSAGE #4	"-NOT USED-"

Welcome Prompts

This category is used to select the sequencing messages that are seen when a customer first pulls up to the GL-ACW. There are up to four sequencing Welcome Messages possible. These four messages may be chosen from a list of pre-programmed messages or a custom message may be created. Up to eight different custom messages can be programmed. If a ninth custom message is attempted, it overwrites the first custom message programmed. Once a custom message is programmed, it will be listed along with the pre-programmed messages when scrolling through the available message choices. These custom messages can be deselected or overwritten, but never erased. If you do not wish to use all four messages, simply program the desired messages with the pre-programmed or custom messages and program the remaining messages with the "-NOT USED-" message located in the pre-programmed message list. This message will not appear on the screen. When this message is encountered in the message sequence, it automatically skips to the next message in the sequence without any time delay.

If Welcome Message #1 is set to the — CLOSED — message located in the pre-programmed message list the machine will go into a Car Wash Closed status. This status overrides the other Welcomes and displays the message "CAR WASH CLOSED" "PLEASE COME AGAIN". This status also inhibits the machine from accepting any credits and prevents any wash selections. Because the Welcome Prompts are one of the four categories that can be changed on a time event basis this allows the operator to close and open the car wash on a set schedule. To close the car wash remotely or to program an open and closed schedule requires the *Hamilton Gold Link* software. This category can be programmed to change automatically at a predetermined time of day, day of the week, or specific date. To use this time event feature requires *Hamilton Gold Link* software.

Welcome Prompts Example: To guide a customer through a transaction, the following messages may be selected:

WELCOME MESSAGE #1	"WELCOME"
WELCOME MESSAGE #2	"SELECT ITEM PLEASE"
WELCOME MESSAGE #3	"OR DEPOSIT MONEY"
WELCOME MESSAGE #4	"-NOT USED-"

Ext Display Messages

This category is used to program up to four personalized External Display messages. The messages displayed are divided into two halves. This category can be programmed to change automatically at a predetermined time of day, day of the week, or specific date. To use this time event feature requires *Hamilton Gold Link* software.

Set Date & Time

This category is used to program the current day, date and time. The time is programmed similar to the following example:

WED_05-30-01_05:30_P

The day is selected followed by the month, date, and year, then the hour and minute, and finally the AM/PM specification.

Set Empty Mode

This category is used to program how the GL-ACW will respond when the hopper runs out of coins. There are two choices, OUT OF SERVICE and USE EXACT AMOUNT. If OUT OF SERVICE is selected and the hopper goes empty, the display will stop showing the Welcome Messages and instead show the sequencing messages “OUT OF SERVICE” and “HOPPER EMPTY”. When this occurs, the bill acceptor and coin acceptors will be deactivated so no further transactions can occur until the hopper is filled with coins. If USE EXACT AMOUNT is selected and the hopper goes empty, the bill acceptor and coin acceptors will remain activated and the display will stop showing the Welcome Messages and instead show the sequencing messages “USE EXACT AMOUNT” and “NO CHANGE RETURNED”. In this mode, it is possible to continue performing transactions even though the hopper is empty since the customer is being notified that no change will be returned and the exact amount must be deposited.

Set Hopper Contents

This category is used to set the type of coin being dispensed from the hopper. It can be quarters, $1 coins or $2 coins.

Set Build Mode

This category is used to enable or disable the Cash Buildup Limit feature. The two choices are LIMIT DISABLED and LIMIT ENABLED. If LIMIT DISABLED is selected, a customer is able to build up credit indefinitely by continuing to deposit money. This can be undesirable if the customer is using the GL-ACW as a changer that will deplete the hopper contents more rapidly than expected. However, if LIMIT ENABLED is selected, the maximum amount of cash buildup is limited by the price of the most expensive wash. This is accomplished by constantly comparing the amount of credit deposited and the four programmed wash prices. As soon as the credit amount is equal to or greater than the most expensive wash price, the GL-ACW deactivates the bill acceptor and coin acceptors so that no further deposits can be made until a wash is selected.

Set Pay Default

This mode is used when a fault is detected in one of the payment devices, such as the validator or one of the coin acceptors. There are two options to choose from in this mode, USE ALT PAYMENT or OUT OF SERVICE. If a fault has been detected and the default payment mode is set to OUT OF SERVICE, the ACW will shut itself down until the error has been corrected. However, if the default payment mode is set to USE ALT PAYMENT, the ACW can continue operating, even if there is a fault in one or more of its payment devices. The display will give examples for payment methods that will be accepted. If all payment options are determined to be faulty, the machine will shutdown, displaying an error message for the last device to have a problem.

Set Upgrade Mode

This category is used to display an offer to the customer to allow them to upgrade to a more expensive wash.

Set Button Mapping

This category allows you to set which selection button will operate which wash. The default setting is that the number one selection button is for the number one wash. You now have the capability of assigning any of the four washes to any of the wash selection buttons.

Receipt Headers & Footers

This category allows up to 8 customized lines of text to be printed on every receipt. Header Lines 1-6 are printed at the top of the receipt and Footer Lines 1 and 2 are printed at the bottom.

Set Receipt Mode

When using the optional printer, this category offers a choice of when a receipt will be printed. You may select from NEVER, ALWAYS, or ASK.

Set Printer Model

When an optional printer has been installed, this category selects which specific model of printer will be supported.

Set POS COM Mode

Allows for operation in the ONLINE or OFFLINE mode when using a POS system. Must be set to OFFLINE unless using POS.

Set POS Type

This category is used to select which type of POS system is being used, POS 4000 or HCS (Hamilton Code System).

Set Unit Number

Allows you to set the unit number for the ACW when it is connected to a POS.

Set Item Passwords

Allows a password to be set to activate a wash using a code. (For units with keypads only.)

Set Que Mode

Allows wash signal to be sent immediately or held until first car clears wash.

Set Welcome Delay

This category is used to set the verbal welcome greeting to be delayed from 0 to 30 seconds. This allows a customer time to completely drive up to the ACW and open their window before the welcome greeting begins speaking.

Vend Duration

This category is used to program the length of time that the GL-ACW turns on its vend relays. The vend relays are turned on to signal the car wash that the customer has finished the transaction and is ready to drive ahead. The length of time these relays should be held depends on the requirements of the particular car wash controller being used. **Refer to your car wash manual before programming this setting**. The possible values range from 0.1 - 4.0 seconds.

VI. PROGRAMMING

The GL-ACW comes pre-programmed from the factory. However, you may decide to program the GL-ACW to meet your individual needs. **DO NOT program a category that you do not fully understand! Refer to the Programmable Options section of this manual for a complete explanation of each category's function.**

❑ **In order to program the GL-ACW, begin at the Welcome Prompt, then follow the steps below:**

1. Open the machine, and locate the controller on the lower inside left hand cabinet wall. Push the top and bottom buttons simultaneously for about 3-5 seconds to enter the programming mode.
2. To begin programming, you must use the four wash select buttons and the refund button located on the door.
   - For ease of reference, the top blue wash select button will be #1. The second down will be #2, the third will be #3 and the bottom will be known as #4. Despite any changes to button order you may have programmed, this is how they will be referred to in this manual.
   - The #2 button is always used as a scroll button. The #4 button is always used to enter a category. The #1 button is used to save options and exit that category. The refund button is used to exit the programming mode.

   Note: After three minutes of inactivity in programming mode, the machine will automatically return to "normal" mode to prevent from being accidentally left in the programing mode after completion.

3. The categories and specific programming instructions begin below and are listed in order as the appear in the menu.

INVENTORY DEPOSITS?

To view the current Inventory Deposits:

- Press the #4 wash select button to enter the category.
- Press the #2 button to scroll between the options:

CASH =
TOKENS =
CODES=
PL CARDS =
CR CARDS=

- Press the #1 button to exit the category.
- Press the #2 button to scroll to the next category.

INVENTORY VENDING?

To view the current Inventory Vending:

- Press the #4 wash select button to enter the category.
- Press the #2 button to scroll between the option:

VEND 1 CNT (count)
VEND 1 CASH (cash)
VEND 1 TOKN (token)
VEND 1 CODE (code)
VEND 1 PLCD (private label card)
VEND 1 CRCD (credit card)
Repeats for each wash

- Press the #1 button to exit the category.
- Press the #2 button to scroll to the next category.

INVENTORY OVERPAID?

To view the current Inventory Overpaid:

- Press the #4 wash select button to enter the category.
- The display will read:

OVERPAID $

- Press the #1 button to exit the category.
- Press the #2 button to scroll to the next category.

AUDIT VAULT COUNT?

To view the current Audit Vault Count:

- Press the #4 wash select button to enter the category.
- Press the #2 button to scroll between the options:

$20 BILL CNT
$10 BILL CNT
$5 BILL CNT
$2 COIN CNT
$1 BILL CNT
$1 COIN CNT
QUARTER CNT
TOKEN 1 CNT
TOKEN 2 CNT
TOKENOTE CNT
COUPON 1 CNT
COUPON 2 CNT
COUPON 3 CNT
COUPON 4 CNT
HOPPER CNT
CR CARD CNT
PL CARD CNT
CODE CNT

- Press the #1 button to exit the category.
- Press the #2 button to scroll to the next category.

To clear all the resettable inventory categories:

Note: Clearing memory clears ALL resettable inventory categories at once.

- Enter a resettable inventory category, such as INVENTORY DEPOSITS?, by pressing the #4 wash select button.
- Press the #2 and #3 wash select buttons simultaneously for about five seconds.
- The display will show the sequencing messages:

  ACTION TO CLEAR
  OR RETURN TO ABORT
- Pressing the #4 wash select button will now clear the memory, and the display will then read:

  MEMORY CLEARED!
- Or to abort, press the #1 wash select button. You will then be returned to the menu mode.
- Press the #2 button to scroll to the next category, or press the #4 button to exit the programming mode.

PRINT AUDIT REPORT?

- Press the #4 wash select button to enter category.
- If you are using a Hand-held printer, you must first plug the harness into th eEIC port (#10) on the Distribution Panel. You may have to unplug the EIC harness first from the port.
- Press the #2 button to scroll between the options:

  TO RECEIPT PRINTER
  TO HAND-HELD PRINTER
- The display will read:

  PRINTING REPORT!
- Upon completion, it will return to the menu options automatically.
- Press the #2 button to scroll to the next category.

PRINT CONFIGURATION REPORT?

- Press the #4 wash select button to enter category.
- If you are using a Hand-held printer, you must first plug the harness into th eEIC port (#10) on the Distribution Panel. You may have to unplug the EIC harness first from the port.
- Press the #2 button to scroll between the options:

  TO RECEIPT PRINTER
  TO HAND-HELD PRINTER
- The display will read:

  PRINTING REPORT!
- Upon completion, it will return to the menu options automatically.
- Press the #2 button to scroll to the next category.

TOKEN COIN MODE?

To set the Token Coin Mode:

- Press the #4 wash select button to enter the category.
- Press the #2 button to scroll between the options:

SINGLE CREDIT MODE
MULTIPLE CREDITS

- Press the #1 button to save and exit the category.
- Press the #2 button to scroll to the next category.

TOKEN COIN VALUE?

To set the Token Coin Value:

- Press the #4 wash select button to enter the category.
- The display will read:

TOKEN COIN 1=

- The amount can be set from $0.00 to $63.75.
- Press the #2 button to increase the amount in $.25 increments.
- Pressing the #3 button will decrease the amount in $.25 increments.
- Press the #4 button to program the other Token Coin.
- Press the #1 button to save and exit the category.
- Press the #2 button to scroll to the next category.

TOKENOTE MODE?

To set the Tokenote Mode:

- Press the #4 wash select button to enter the category.
- Press the #2 button to scroll between the options:

MULTIPLE CREDITS
SINGLE CREDIT MODE

- Press the #1 button to save and exit the category.
- Press the #2 button to scroll to the next category.

TOKENOTE VALUE?

To set the Tokenote Value:

- Press the #4 wash select button to enter the category.
- Press the #2 button to scroll between the options:

TOKENOTE=

- The amount can be set from $0.00 to $63.75.
- Press the #2 button to increase the amount in $.25 increments.
- Pressing the #3 button will decrease the amount in $.25 increments.
- Press the #1 button to save and exit the category.
- Press the #2 button to scroll to the next category.

COUPON MODE?

To set the Coupon Mode:

- Press the #4 wash select button to enter the category.
- Press the #2 button to scroll between the options:

SINGLE VALUE MODE
MULTIPLE VALUE MODE

- Press the #1 button to save and exit the category.
- Press the #2 button to scroll to the next category.

COUPON VALUES?

To set the Coupon Values in "**Single Coupon Mode**":

- Press the #4 wash select button to enter the category.

SET COUPON 1 VALUE

COUPON 1 =

- The amount can be set from $0.00 to $63.75.
- Press the #2 button to increase the amount in $.25 increments.
- Pressing the #3 button will decrease the amount in $.25 increments.
- Press the #1 button to save.
- Press the #2 button to go to the next coupon value.
- Each coupon may be programmed for a single value for each wash.
- When finished programming desired amounts, press the #1 button to exit the category.
- Press the #2 button to scroll to the next category.

To set the Coupon Values in "**Multiple Coupon Mode**":

- Press the #4 wash select button to enter the category.

SET COUPON 1 VALUE

ITEM 1 =
ITEM 2 =
ITEM 3 =
ITEM 4 =

- The amount can be set from $0.00 to $63.75.
- Press the #2 button to increase the amount in $.25 increments.
- Pressing the #3 button will decrease the amount in $.25 increments.
- Each coupon may be programmed with a different value for each wash. If you want the coupon to have the same value for each wash, simply program all the washes to have the same value for that coupon.
- Press the #4 button to scroll to the next item.
- Press the #1 button to save.
- Press the #2 button to go to the next coupon value.
- When finished programming desired amounts, press the #1 button to exit the category.
- Press the #2 button to scroll to the next category.

ITEM PRICES?

To set the Wash Prices:

- Press the #4 wash select button to enter the category.

ITEM 1=
ITEM 2=
ITEM 3=
ITEM 4=

- The amount can be set from $0.00 to $63.75.
- Press the #2 button to increase the amount in $.25 increments.
- Pressing the #3 button will decrease the amount in $.25 increments.
- To continue programming Item 2 through Item 4, press the #4 button to select the Item Price and then use the #2 or #3 buttons to program the amount.
- When finished programming desired amounts, press the #1 button to save the selection and exit the category.
- Press the #2 button to scroll to the next category.

ITEM NAMES?

To set the wash names:

- Press the #4 wash select button to enter the category.
- Use the wash select button #2 to scroll through the item numbers.

ITEM 1
ITEM 2
ITEM 3
ITEM 4

- Press button #4 to select the Item number to be programmed.
- Press button #2 to then scroll through the item names.
- There are 38 pre-programmed item wash names for each item .
- Press the #1 wash select button to select a name.

CUSTOM ITEM NAMES?

To program custom wash names:

- Press the #4 wash select button to enter the category.
- Use the wash select button #4 to scroll through the item numbers.

CUSTOM NAME 1
CUSTOM NAME 2
CUSTOM NAME 3
CUSTOM NAME 4
CUSTOM NAME 5
CUSTOM NAME 6
CUSTOM NAME 7
CUSTOM NAME 8

- Press button #4 to select the Item number to be programmed.
    1. Hold button #4 to make the cursor appear.
    2. Use button #2 to scroll to desired letters or punctuation. Button #3 will scroll through letters and punctuation in the opposite direction.
    3. Button #4 moves to the next space.
    4. When you have completed your message, push button #1 to save it into memory and select it as the message to be displayed.
    5. Press the #4 button to check.
- To scroll to the next item number name, press the #4 button.
- Press the #2 button to scroll through the options.
- Press #1 to select or repeat steps 1-5 for custom messages.

- Press the #1 button to exit the category.
- Press the #2 button to scroll to the next category.

PROCEED PROMPTS?

To set the Proceed Prompts:

- Press the #4 wash select button to enter the category.
- Use the wash select button #4 to scroll through the Proceed Messages 1-4

  PROCEED MESSAGE #1
  PROCEED MESSAGE #2
  PROCEED MESSAGE #3
  PROCEED MESSAGE #4

- Press button #4 to select the Message numbers to be programmed.
- Press button #2 to then scroll through the eight pre-programmed messages and the one "NOT USED" message.
- Press the #1 wash select button to select a message.
- You may also program eight custom messages.

  To begin programming a **custom message**:

  1. You must first be on a custom message screen which appears blank.
  2. Hold button #4 to make the cursor appear.
  3. Use button #2 to scroll to desired letters or punctuation. Button #3 will scroll through letters and punctuation in the opposite direction.
  4. Button #4 moves to the next space.
  5. When you have completed your message, push button #1 to save it into memory and select it as the message to be displayed.
  6. Press the #4 button to check

  .

- To scroll to the next Proceed Message number, press the #4 button.
- Press the #2 button to scroll through the options.
- Press #1 to select or repeat steps 1-6 for custom messages.
- Press the #1 button to exit the category.
- Press the #2 button to scroll to the next category.

WELCOME PROMPTS?

To set the Welcome Prompts:

- Press the #4 wash select button to enter the category.
- Use the wash select button #4 to scroll through the Welcome Messages 1-4

  WELCOME MESSAGE #1
  WELCOME MESSAGE #2
  WELCOME MESSAGE #3
  WELCOME MESSAGE #4

- Press button #4 to select the Message numbers to be programmed.
- Press button #2 to then scroll through the 18 pre-programmed messages and the "CLOSED", "NOT USED" and the Time & Date stamp messages.
- Press the #1 wash select button to select a message.
- You may also program eight custom messages.

To begin programming a **custom message**:

1. You must first be on a custom message screen which appears blank.
2. Hold button #4 to make the cursor appear.
3. Use button #2 to scroll to desired letters or punctuation. Button #3 will scroll through letters and punctuation in the opposite direction.
4. Button #4 moves to the next space.
5. When you have completed your message, push button #1 to save it into memory and select it as the message to be displayed.
6. Press the #4 button to check.

- To scroll to the next Welcome Prompt Message number, press the #4 button.
- Press the #2 button to scroll through the options.
- Press #1 to select or repeat steps 1-6 for custom messages.
- Press the #1 button to exit the category.
- Press the #2 button to scroll to the next category.

EXT DISPLAY MSGS?

To set the messages to appear on the External Display:

- Press the #4 wash select button to enter the category.
- The display will read:

MESSAGE #1 FIRST HALF

To begin programming this **custom message**:

1. You must first be on a custom message which appears blank.
2. Hold button #4 to make the cursor appear.
3. Use button #2 to scroll to desired letters or punctuation. Button #3 will scroll through letters and punctuation in the opposite direction.
4. Button #4 moves to the next space.
5. When you have completed your message, push button #1 to save it into memory and select it as the message to be displayed.
6. Press the #4 button to check.

- To scroll to the next message half, press the #4 button.
- Repeat steps 1-6 for custom messages or press #2 to scroll to the “NOT USED” message.
- Press the #1 button to exit the category
- Press the #2 button to scroll to the next category.

SET DATE & TIME?

To set the Date & Time:

- Press the #4 wash select button to enter the category.
- The cursor will be flashing.
- Press the #2 button to change the day.
- Press the #4 button to go to the month.
- Press the #2 button to change the month.

- Press the #4 button to go to the year.
- Press the #2 button to change the year.
- Press the #4 button to go to the hour.
- Press the #2 button to change the hour.
- Press the #4 button to go to the minute.
- Press the #2 button to change the minute.
- Press the #4 button to go to the AM/PM.
- Press the #2 button to change AM/PM.
- Press the #1 button to set and exit the category.
- Press the #2 button to scroll to the next category.

SET EMPTY MODE?

To set the machines mode of operation when the hopper is empty:

- Press the #4 wash select button to enter the category.
- Press the #2 button to scroll between the options:

OUT OF SERVICE
USE EXACT AMOUNT

- Press the #1 button to save and exit the category.
- Press the #2 button to scroll to the next category.

SET HOPPER CONTENTS?

To set the Hopper Contents:

- Press the #4 wash select button to enter the category.
- Press the #2 button to scroll between the options:

QUARTERS
$1 COINS
$2 COINS

- Press the #1 button to save and exit the category.
- Press the #2 button to scroll to the next category.

SET BUILD MODE?

To set the Build Mode:

- Press the #4 wash select button to enter the category.
- Press the #2 button to scroll between the options:

LIMIT ENABLED
LIMIT DISABLED

- Press the #1 button to save and exit the category.
- Press the #2 button to scroll to the next category.

SET PAY DEFAULT?

To set the machines mode of operation when a money acceptor is faulty:

- Press the #4 wash select button to enter the category.
- Press the #2 button to scroll between the options:

USE ALT PAYMENT
OUT OF SERVICE

- Press the #1 button to save and exit the category.
- Press the #2 button to scroll to the next category.

SET UPGRADE MODE?

To set the Upgrade Mode:

- Press the #4 wash select button to enter the category.
- Press the #2 button to scroll between the options:

UPGRADES DISABLED
UPGRADES ENABLED

- Press the #1 button to save and exit the category.
- Press the #2 button to scroll to the next category.

SET BUTTON MAPPING?

To set the Button Order:

- Press the #4 wash select button to enter the category.
- Press the #2 button to scroll between the options:

BUTTON 1 = WASH 1
WASH 2
WASH 3
WASH 4
DISABLE

- Continue to program the #2 - #4 wash buttons as well as the Refund Button to Enable or Disable.
- Press the #1 button to save your selection.
- Press the #2 button to scroll to the next category.

RECEIPT HEADERS & FOOTERS?

To set the Receipt Headers:

- Press the #4 wash select button to enter the category.
- Up to eight lines of text may be selected.
- Press the #2 button to scroll between the options:

DATE
NOT USED
CUSTOM

To begin programming a **custom message**:

1. You must first be on a custom message screen which appears blank.
2. Hold button #4 to make the cursor appear.
3. Use button #2 to scroll to desired letters or punctuation. Button #3 will scroll through letters and punctuation in the opposite direction.
4. Button #4 moves to the next space.
5. When you have completed your message, push button #1 to save it into memory and select it as the message to be displayed.
6. Press the #4 button to check.

- To scroll to the next line, press the #4 button.
- Press the #2 button to scroll through the options.
- Press #1 to select or repeat steps 1-6 for custom messages.
- Press the #1 button to exit the category.
- Press the #2 button to scroll to the next category.

SET RECEIPT MODE?

To set the Receipt Mode:

- Press the #4 wash select button to enter the category.
- Press the #2 button to scroll between the options:

NEVER
ALWAYS PRINT
ASK

- Press the #1 button to save and exit the category.
- Press the #2 button to scroll to the next category.

SET PRINTER MODEL?

To set the model of printer:

- Press the #4 wash select button to enter the category.
- Press the #2 button to scroll between the options:

SEIKO SAM-1245
SEIKO LTPF247

- Press the #1 button to save and exit the category.
- Press the #2 button to scroll to the next category.

SET POS COM MODE?

To set the POS COM Mode:

- Press the #4 wash select button to enter the category.
- Press the #2 button to scroll between the options:

ONLINE MODE
OFFLINE MODE

- Press the #1 button to save and exit the category.
- Press the #2 button to scroll to the next category.

SET POS TYPE?

To set which type of POS unit being used:

- Press the #4 wash select button to enter the category.
- Press the #2 button to scroll between the options:

POS 4000
HCS (6 DIGIT)
HCS (5 DIGIT)

- Press the #1 button to save and exit the category.
- Press the #2 button to scroll to the next category.

SET UNIT NUMBER?

To designate the Unit Number:

- Press the #4 wash select button to enter the category.
- Press the #2 button to scroll between the options:

UNIT #1
UNIT #2
UNIT #3
UNIT #4
UNIT #5
UNIT #6
UNIT #7
UNIT #8
UNIT #9

- Press the #1 button to save and exit the category.
- Press the #2 button to scroll to the next category.

SET ITEM PASSWORDS?

To set an Item Password:

- Press the #4 wash select button to enter the category.
- The display will read:

PASSWORD #1=

- Press the #2 button to increase, or the #3 button to decrease the Password number in increments of 10. This number can be set from 10 to 99990.
- Repeat the process for Password #2-#4
- Press the #1 button to exit the category.
- Press the #2 button to scroll to the next category.

SET QUE MODE?

To set the Que Mode:

- Press the #4 wash select button to enter the category.
- Press the #2 button to scroll between the options:

SUSPEND VEND PULSE
RELEASE VEND PULSE

- Press the #1 button to save and exit the category.
- Press the #2 button to scroll to the next category.

SET WELCOME DELAY?

To set the Welcome Delay:

- Press the #4 wash select button to enter the category.
- Press the #2 button to increase, or the #3 button to decrease in one second increments between 0 and 30 seconds.
- Press the #1 button to save and exit the category.
- Press the #2 button to scroll to the next category.

VEND DURATION?

To set the Vend Duration:

- Press the #4 wash select button to enter the category.
- Press the #2 button to move in .1 second increments between .1 and 4 seconds.
- Press the #1 button to exit the category.
- Press the #2 button to scroll to the next category.

TOTAL DEPOSITS?

To view the Total Deposits:

- Press the #4 wash select button to enter the category.
- Press the #2 button to scroll between the options:

CASH =
TOKENS =
CODES=
PL CARDS =
CR CARDS=

- Press the #1 button to exit the category.
- Press the #2 button to scroll to the next category.

TOTAL VENDING?

To view the Total Vending:

- Press the #4 wash select button to enter the category.
- Press the #2 button to scroll between the option:

VEND 1 CNT (count)
VEND 1 CASH (cash)
VEND 1 TOKN (token)
VEND 1 CODE (code)
VEND 1 PLCD (private label card)
VEND 1 CRCD (credit card)
Repeats for each wash

- Press the #1 button to exit the category.
- Press the #2 button to scroll to the next category.

TOTAL OVERPAID?

To view the Total Overpaid:

- Press the #4 wash select button to enter the category.
- The display will read:

OVERPAID $

- Press the #1 button to exit the category.
- Press the #2 button to scroll to the next category.

TOTAL VAULT COUNT?

To view the Total Vault Count:

- Press the #4 wash select button to enter the category.
- Press the #2 button to scroll between the options:

$20 BILL CNT
$10 BILL CNT
$5 BILL CNT
$2 COIN CNT
$1 BILL CNT
$1 COIN CNT
QUARTER CNT
TOKEN 1 CNT
TOKEN 2 CNT
TOKENOTE CNT
COUPON 1 CNT
COUPON 2 CNT
COUPON 3 CNT
COUPON 4 CNT
HOPPER CNT
CR CARD CNT
PL CARD CNT
CODE CNT

- Press the #1 button to exit the category.

VII. MAINTENANCE

A few simple maintenance routines can extend the productivity of the Autocashier.

CAUTION! DO NOT USE OIL, GREASE OR SOLVENTS ON ANY PART OF THIS UNIT EXCEPT AS CLEARLY SPECIFIED IN THIS MANUAL, THE HOPPER, VALIDATOR, OR STACKER MANUAL.

MONTHLY MAINTENANCE

Hopper

The hopper should be cleaned at least every other month. To do so, please refer to the Hamilton HSH Hopper Operational Manual.

Validator

Please refer to the appropriate validator manual.

Stacker

Please refer to the appropriate manual.

ANNUAL MAINTENANCE

Hamilton Validators

The validator should be serviced annually to maintain maximum performance. This work should only be done by a trained technician.

Hamilton Stackers

- All pivot points must be cleaned and re-greased.
- Check the switch tightness and the cam to see if it is still in round.
- Check for bent, loose, worn, rusted or corroded parts.
- Check the motor for coasting.
- Use a small amount of Dry Slick™ on the slides. **Do not use grease or WD-40™.**

VIII. ERROR CODES

The GL-ACW is equipped with a self-diagnostic capability that makes it possible for common problems to be quickly detected and serviced. When most errors occur, the controller will automatically shut down the entire unit as a precaution in order to prevent further malfunctions. When the GL-ACW shuts itself down after an error has been detected, it deactivates the bill acceptor and coin acceptors so that further deposits cannot be accepted. When this occurs, the display will read:

OUT OF SERVICE

It is necessary to troubleshoot and correct the problem before normal operation can resume. Shutting off power to the unit will not erase this error condition. **To resume normal operation, it is necessary to:**

1. Acknowledge that you have seen the error. To do this, press the YELLOW button on the controller. When this button is pressed the display will show the detected error. (Possible errors and their descriptions are covered later in this section.)
2. After making note of the error and correcting the problem, it is necessary to once again press the YELLOW button to return to normal operation. When this button is pressed the display will read:

ERROR ACKNOWLEDGED

3. The display will then return to the welcome prompt.

It is possible for the GL-ACW to detect an error and still remain operational. This occurs when the default payment mode has been set to "USE ALT PAYMENT" instead of "OUT OF SERVICE". In the "USE ALT PAYMENT" mode, the controller will only shut down the component that is malfunctioning. The controller will stop displaying the normal Welcome Messages and instead display the messages "PAYMENT OPTIONS…" and "USE BILLS ONLY" (depending on which payment options are available). When all the payment options have been exhausted, the GL-ACW will shut down and display an error message for the last component malfunction. When this occurs, follow the above steps to return to normal operation.

ERROR CODES

$5 Input Stuck

When signaling that a $5, $10 or a $20 bill has been accepted this line gets pulled low briefly. If the $5 line should get pulled low for an extended period of time, this error will result and the machine will be shut down.

$1 Input Stuck

When signaling that a $1 bill has been accepted this line gets pulled low briefly. If the $1 line should get pulled low for an extended period of time, this error will result and the machine will be shut down.

25¢ Input Stuck

When signaling that a quarter has been accepted this line gets pulled low briefly. If the Quarter line should get pulled low for an extended period of time, this error will result and the machine will be shut down.

Token Input Stuck

When signaling that a token coin has been accepted this line gets pulled low briefly. If the Token line should get pulled low for an extended period of time, this error will result and the machine will be shut down.

Unexpected Credit

When the BUILD LIMIT is enabled and the amount of credit equals or exceeds the most expensive wash price the GL-ACW deactivates the bill and coin acceptors to inhibit any further deposits. If this condition exists and the GL-ACW sees a credit signal from the bill or coin acceptors anyway, this error will result and the machine will be shut down.Drop Switch Stuck

When signaling that a coin is being dispensed this line gets pulled high briefly. If the Drop line should get pulled high for an extended period of time, this error will result and the machine will be shut down. This situation is only tested during the time a payout is occurring.

Unexpected Coin Drop

When a coin is dispensed, the Drop line goes high briefly, then returns to its logic low state. If the controller records two unexpected coin drop signals while in standby, the machine will shut down with this error.

Hopper Coasting Error

If two coin drop signals are recorded immediately after the hopper has paid out, the machine will shut down with this error.

Hopper Time-out

When a coin is dispensed, the Drop line goes high briefly then returns to its logic low state. If during the time a payout is occurring a high pulse is not detected for 10 consecutive seconds this error will result and the machine will be shut down.

Stacker Time-out

The Busy line goes high during the bill stacking process then returns to its logic low state when the stacker reaches its home position. If the stacker never returns to its home position, this error will result and the machine will be shut down.

Multiple Power Int

There is special circuitry inside the controller to determine if a power outage has occurred. If there are several power outages while processing money (dispensing coins, stacking bills, etc.) this error will occur and the machine will be shut down.

Memory Data Altered!

There are special detection routines built into the Controller's program that can determine if its memory has been corrupted. If the memory is corrupted, values such as wash prices and the audits can no longer be trusted. If this should occur, the entire memory is cleared and the machine will be shut down. Reprogramming the controller will be necessary since all settings will default to the lowest possible denomination ($0.00) for credits and the highest possible denomination ($63.75) for any payment option. This default mechanism is used as a safeguard to ensure that the machine does not give away free washes.

The following errors will be displayed as long as the faulty condition exists, but will be cleared as soon as the condition is corrected. THIS MEANS THESE ERRORS DO NOT NEED TO BE ACKNOWLEDGED BY PRESSING THE YELLOW BUTTON.

Hopper Empty

When there are not enough coins to make a connection from the bottom of the hopper up to the two coin sensing plates in the hopper bowl, the Empty line goes high. When this happens, the Hopper Empty error will result. Refilling the hopper with coins will automatically clear this error.

Release Button

When one of the item selection buttons is held in for an extended period of time this message will appear on the display. Releasing the button should automatically clear this error. If the error does not clear, however, it could indicate the REFUND button is broken or stuck. Dislodge or replace the button to remedy this error. If the error still does not clear, there may be damage to the CPU, in which case you should contact the Hamilton Customer Service Department for assistance.

Please Wait! – Equipment Not Ready

The voltage coming from the car wash controller to the cycle inhibit relay, has changed unexpectedly from its normal condition. After eight seconds of this change, the display will show this error indicating a malfunction in the car wash system. Returning the cycle line to its normal condition will automatically clear this error.

Out Of Service - Car Wash Closed

The voltage coming from the car wash controller to the cycle inhibit relay, has changed unexpectedly from its normal condition. After ten minutes of this change, the display will show this error indicating a malfunction in the car wash system. Returning the cycle line to its normal condition will automatically clear this error.

IX. TROUBLESHOOTING

In addition to the self-diagnostic error codes, there are other possibilities that could arise in the installation or at some point during the extended operation of your GL-ACW. This section provides a general troubleshooting guide, broken down into categories of symptoms.

Money Acceptance

SITUATION	PROBABLE CAUSE	CORRECTIONS
• Cannot activate refund • Credit is showing on display	**A.** In "USE EXACT AMOUNT" mode **B.** Selection buttons are not working **C.** CPU input is missing	**A.** Fill coin Hopper or change mode to "OUT OF SERVICE" **B.** Replace button **C.** Contact the factory for assistance
• Accepts fee, but car wash does not start • "DRIVE AHEAD" or similar message shown on ACW Display	Observe the VEND RELAYS and see below	Observe the VEND RELAYS and see below
IF THE RELAY ACTIVATES…	**A.** Duration of relay closure is too long or too short for wash equipment to recognize **B.** Wash equipment is not accepting signal from ACW **C.** Broken connection in wiring between ACW and wash equipment	**A.** Reprogram "VEND DURATION" setting in ACW Controller **B.** Refer to the car wash manual **C.** Locate and repair connection
IF RELAY DOES NOT ACTIVATE…	**A.** Vend relay is loose or defective **B.** Broken connection in wiring between ACW Controller and relay panel **C.** Output missing from Controller	**A.** Reinstall or replace relay **B.** Locate and repair connection **C.** Contact the factory for assistance
One Coin Acceptor does not accept coins	**A.** Broken connection on power wires to Coin Acceptor **B.** Coin Acceptor sensitivity is too high **C.** Coin Acceptor is defective	**A.** Locate and repair connection **B.** Adjust sensitivity **C.** Replace Coin Acceptor

Money Acceptance (Continued)

SITUATION	PROBABLE CAUSE	CORRECTIONS
• Both Coin Acceptors do not accept coins • Validator does accept bills	**A.** Broken connection on either the power wires supplying the Transformer, or the wires from the Transformer to the Coin Acceptor **B.** Transformer not working **C.** Both Coin Acceptors are defective	**A.** Locate and repair connection **B.** Replace Transformer **C.** Replace Coin Acceptors
• Both Coin Acceptors do not accept coins • Validator is disabled	**A.** Controller is either OUT OF SERVICE, in PROGRAMMING MODE or TRANSMITTING DATA **B.** Broken connection on ENABLE wire which runs from the Controller to the Validator and Transformer **C.** ENABLE output missing from Controller	**A.** Place Controller in normal operating mode **B.** Locate and repair connection **C.** Contact the factory for assistance
Coin Acceptor accepts only some coins	**A.** Coins being used are of poor quality **B.** Coin Acceptor sensitivity too high **C.** Loose connection to Coin Acceptor	**A.** Use a different coin sample **B.** Adjust sensitivity **C.** Locate and repair connection
• Validator disabled (Refer to appropriate manual) • Coin Acceptor is working	**A.** Broken connection on ENABLE wire from Controller to Validator **B.** Validator ENABLE circuit changed	**A.** Locate and repair connection **B.** Contact the factory for assistance
• Validator dead (No LED lit on Validator) • Coin Acceptor is working	**A.** Broken connection on power wires to Validator **B.** Validator is defective	**A.** Locate and repair connection **B.** Contact the factory for assistance
• Validator dead (LED lit, but not displaying error code) • Coin Acceptor is working	**A.** Dirty or blocked sensor inside Validator **B.** Blocked bill path (will not allow insertion) **C.** Validator drive train problems **D.** Validator PCB damaged	**A.** Remove obstruction or clean sensors **B.** Remove obstruction **C.** Contact the factory for assistance **D.** Contact the factory for assistance

Money Acceptance (Continued)

SITUATION	PROBABLE CAUSE	CORRECTIONS
Validator dead (LED flashing error code)	Error detected by Validator PCB	Refer to the Validator Manual for Validator error codes
Validator runs without inserting a bill	Dirty blocked sensor inside Validator	Remove obstruction or clean sensors
Validator rejects too many bills or all bills (bill goes in and comes back out)	**A.** Dirty sensor, magnetic heads or rollers **B.** Validator requires service	**A.** Clean as needed or contact the factory for assistance **B.** Contact the factory for assistance
• Validator accepts bills • Does not give credit	**A.** Bill stuck completely or partially in Validator **B.** Error detected **C.** Broken connection on vend wires between Validator and Controller **D.** Controller CPU missing input	**A.** Determine cause of jam and remove bill from Validator (Refer to the Validator Manual), or Contact the factory for assistance **B.** Refer to the Validator Manual or contact the factory for assistance **C.** Locate and repair connection **D.** Contact the factory for assistance

Hopper

SITUATION	PROBABLE CAUSE	CORRECTION
Overpayment of change	**A.** Wash prices set incorrectly **B.** Hopper not counting coins	**A.** Check wash prices **B.** Perform HOPPER PAYOUT TEST (Refer to the Hopper Manual)
• Hopper does not run • Hopper does not pay back change	**A.** Coin or foreign material lodged in Hopper **B.** Broken connection in wire between Controller and Hopper motor **C.** Output missing from Controller	**A.** Clear obstruction in Hopper **B.** Locate and repair connection **C.** Contact the factory for assistance
Hopper runs slowly	**A.** Foreign material in Hopper **B.** Output weak from Controller	**A.** Remove foreign material **B.** Contact the factory for assistance
• Underpayment of change • Controller does not go into “OUT OF SERVICE”	**A.** Wash prices set incorrectly **B.** Coins fall back into Hopper after counting **C.** CPU misreads coin count	**A.** Check wash prices **B.** Perform HOPPER PAYOUT TEST (Refer to the Hopper Manual) **C.** Contact the factory for assistance
• Underpayment of change • Controller does go into “OUT OF SERVICE”	Error detected by Controller (See ERROR CODES)	Correct malfunction, acknowledge error

Display

SITUATION	PROBABLE CAUSE	CORRECTIONS
• Display is blank • No manual Hopper run • No functions • No LED on Validator	**A.** No power source **B.** Circuit Breaker is set to off	**A.** Switch on main power **B.** Switch on Circuit Breaker
• Display is always blank • Hopper runs using manual switch located on bottom rear of Hopper	Controller display problems	Contact the factory for assistance
Display is blank until button is pushed or credit is deposited	Welcome Messages are not programmed	Program Welcome messages
Display reads “OUT OF SERVICE” alternating to “HOPPER EMPTY”, or display reads “USE EXACT AMOUNT” alternating to “NO CHANGE	**A.** Coin Hopper is empty **B.** Sensors are dirty **C.** Loose connection on Empty Circuit	**A.** Refill Hopper **B.** Clean Sensors (See MAINTENANCE section) **C.** Locate and repair the connection
Display reads “OUT OF SERVICE”	Error detected by Controller (See Error Codes)	Correct malfunction, acknowledge error
Display reads “RELEASE BUTTON”	**A.** Refund Button or contact block is stuck **B.** Damage to CPU	**A.** Dislodge stuck button or contact block **B.** Contact the factory for assistance

Voice

SITUATION	PROBABLE CAUSE	CORRECTIONS
• Welcome greeting is not activated • Other messages working properly	Proximity Sensor is malfunctioning	Clean sensor
No voice messages are activated	**A.** Volume is too low **B.** Loose connections	**A.** Turn up volume **B.** Check harness connections to speaker

X. PARTS

The following is a list of parts for the GL-ACW, which may be ordered from your Hamilton Distributor.

PART #	DESCRIPTION	QTY.
05-0002	ASSM, LCD DISPLAY	1
05-0008	ASSM, DISPLAY 2 LINE VFD (ALTERNATE)	1
11-0101	ACW HOPPER ASSM.	1
47-0300	110VAC RELAY	7
47-0301	24VAC RELAY	0
47-0302	24VDC RELAY	0
49-4000A	DISTRIBUTION PANEL COMPLETE	1
49-4001A	P.C.B. COMPLETE	1
49-9305	BLUE BUTTON	4
49-9373	RED BUTTON	1
49-9376	PRINTER PAPER (OPTIONAL)	1
60-2012A	POWER SUPPLY ASSM.	1
60-2027A	VOICE SENSOR ASSM.	1
60-2030A	ENVIRONMENTAL CONTROLLER ASSM.	1
60-2031A	VOICE MODULE ASSM.	1
60-2032A	110VAC RELAY BOX ASSM.	1
	Or	
60-2032B	ASSM, 24VAC RELAY	1
	Or	
60-2032C	ASSM, 24VDC RELAY	1
60-2039B	EIC ASSM.	1
05-0009	LTP PRINTER ASSM. (OPTIONAL)	1
60-2058A	ASSM., ACW G/L CARD READER (OPTIONAL)	1
63-5005	LOCK PAIR	1
63-5040	LOCK CRANK	1

Interchanging Validators

To replace an existing validator with a Coinco® Validator, the following parts are needed. The Coinco® mounting kit is part #60-2103B. Please note the Coinco® Validator (part #46-0169) is not included in the kit and must be ordered separately.

Part #	Description	Qty
60-2053	Security Bracket	1
90-0145	#8-32 X 5/8 Phillips Head Screw	4
90-0331	#1/4-20 Hex Nut	4
90-0403	#1/4 Internal Lock Washer	4
60-2051	U-Channel	1
90-0629	#10-32 x ½ Thumb Screw	1
60-2050	Validator Plate	1
90-0321	#8-32 Nylon Nut	4
60-2054	Slider	1
90-0517	#8-32 x 5/8 Ball Stud	4
90-0628	#10-32 x 3/16 Phillister	4
46-0169	Validator Coinco 24v	1
48-3044	ACW G/L Coinco 24v cable	1
48-3046	ACW G/L 3rd Party Stacker	1

To replace an existing validator with a Mars® Validator, the following parts are needed. The Mars® mounting kit is part #60-2104B. Please note the Mars® Validator (part #46-0201) is not included in the kit and must be ordered separately.

Part #	Description	Qty
60-2055	Security Bracket	1
90-0145	#8-32 x 5/8 Phillips Head Screw	4
90-0331	#1/4-20 Hex Nut	4
90-0403	#1/4 Internal Lock Washer	4
60-2051	U-Channel	1
90-0629	#10-32 x ½ Thumb Screw	1
60-2050	Validator Plate	1
90-0321	#8-32 Nylon	4
60-2052	UVM Slider	1
90-0517	#8-32 x 5/8 Ball Stud	4
90-0628	#10-32 x 3/16 Phillister Head	4
46-0201	Validator Mars 24v	1
48-3043	ACW G/L Mars 24v cable	1
48-3046	ACW G/L 3rd Party Stacker	1

XI. OPTIONAL RECEIPT PRINTER

Safety Precautions

- **The motor is hot immediately after printing. Allow cooling before handling.**
- **The edge of the mechanism is sharp, use caution when handling.**

Inserting Paper

Loading Paper

1. Open platen by lifting blue lever on right side of printer. (Be sure to hold platen to prevent it from swinging down when released.)

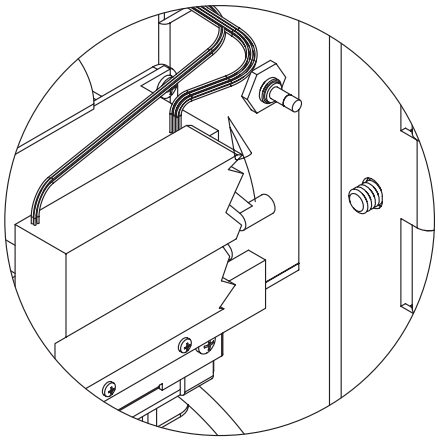

Figure 11-1

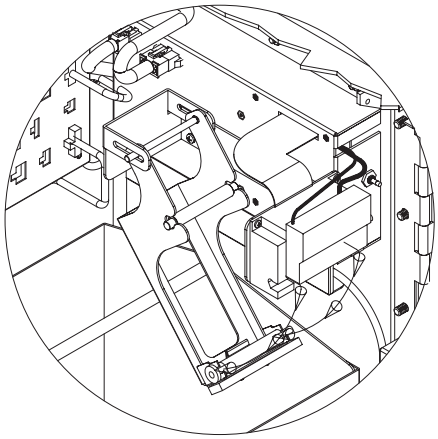

Figure 11-2

2. Remove printer rod and place in center of paper roll and replace on platen.

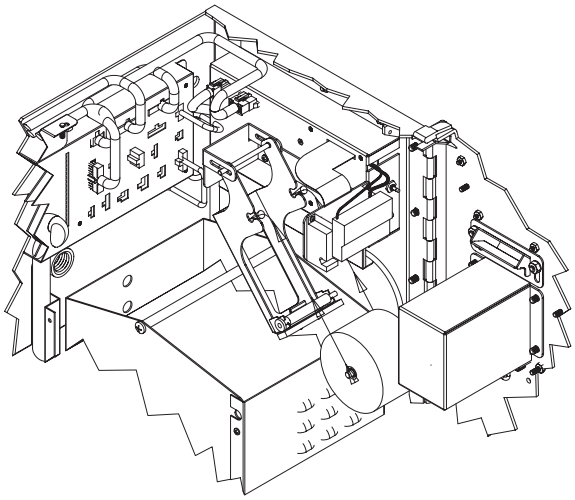

Figure 11-3

3. Unroll about 4 inches of paper and center on roller and close the platen by rotating it upward and sliding it back until it snaps into position.

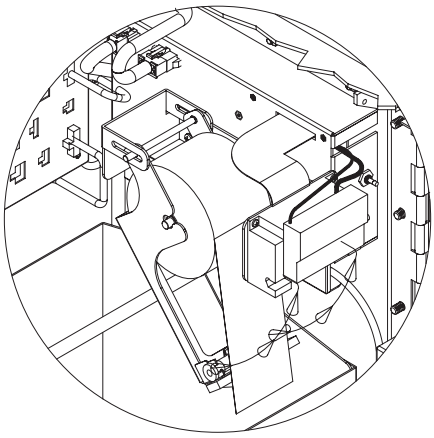

Figure 11-4

4. Push button to ensure straight feed and tear off by pulling down on excess.

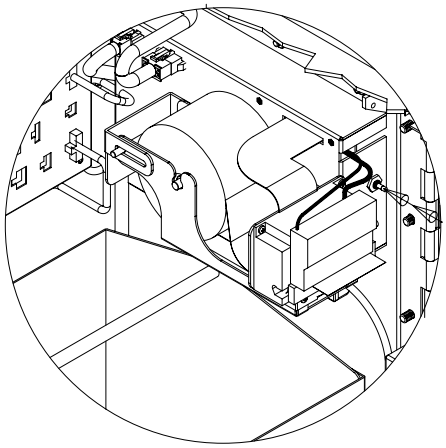

Figure 11-5

Clearing a Paper Jam in the Autocutter

If the cutter has been locked during paper cutting, power off the motor immediately and cancel the lock by performing the following procedures manually:

1. Tear transparent film from the upper surface of the autocutter (figure 11-6A), turn the knob in the direction shown in figure 11-6B until the entire hole of the warm wheel can be seen from the standby position confirmation window and retreat the moveable blade. (Figure 11-6B)

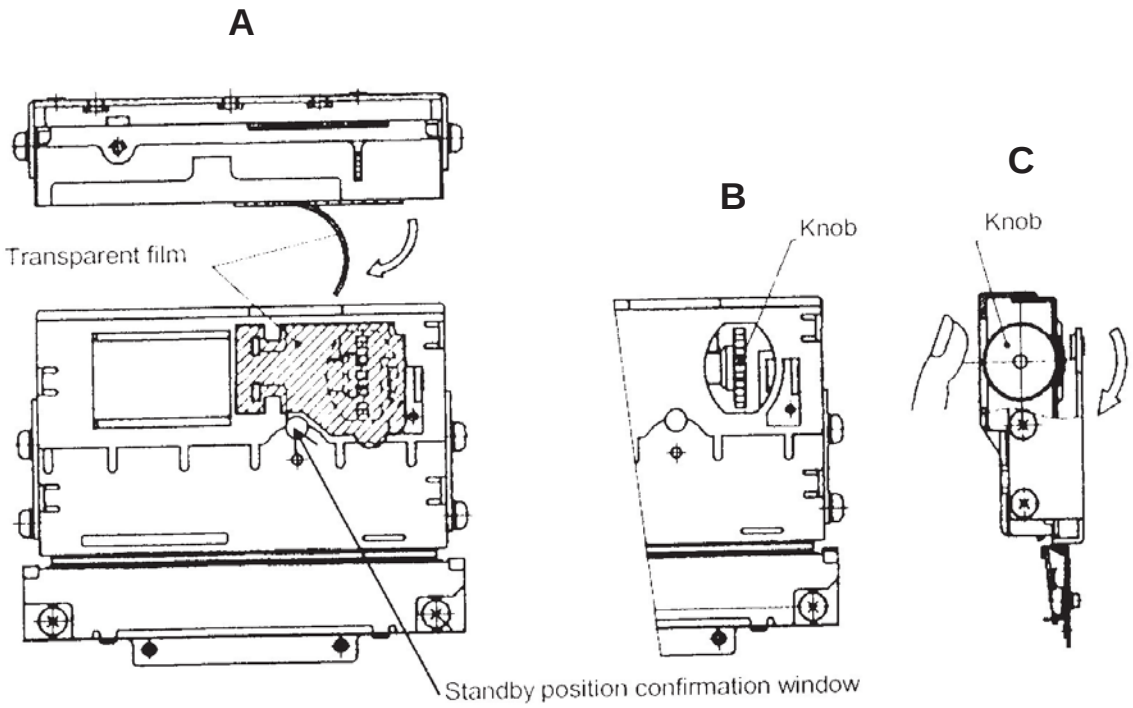

Figure 11-6

Head Cleaning Precautions and Procedure

Cleaning Precautions

1. Do not clean the head directly after printing because the thermal head and its periphery are hot during and after printing.

2. Do not use sandpaper, paper knife etc. when cleaning as it could damage the heat elements.

Cleaning Procedure:

1. Turn over the lever to the direction of the arrow in figure 11-7. Pull up the platen after making sure that the platen is released from the lever. (Open state)

2. Clean the heat elements with a cotton swab immersed in ethyl alcohol or isopropyl alcohol.

3. After the alcohol has completely dried, close the platen. (Closed state)

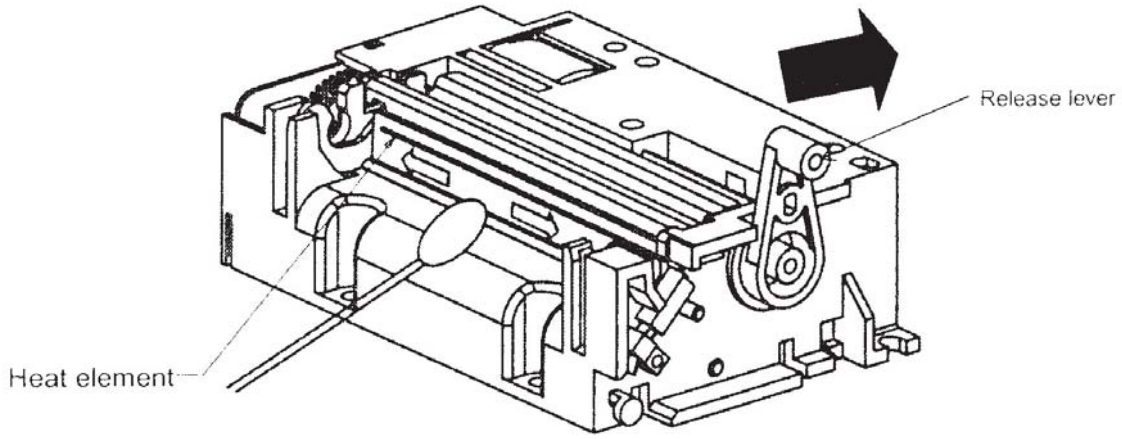

Figure 11-7

THERMAL PAPER SPECIFICATIONS

Model

TF50KS-E2C: Normal thermal paper
PD160R-N: Medium proof paper
HP220AB1: Medium proof paper

- 58 -1 mm Paper width

XII. EIC COMMUNICATION PANEL

The External Interface controller contains a 386 processor and modem, which is used for processing credit card transactions. The EIC allows communication with external equipment. See Figures 12-1 and 12-2.

Figure 12-1 EIC Front View

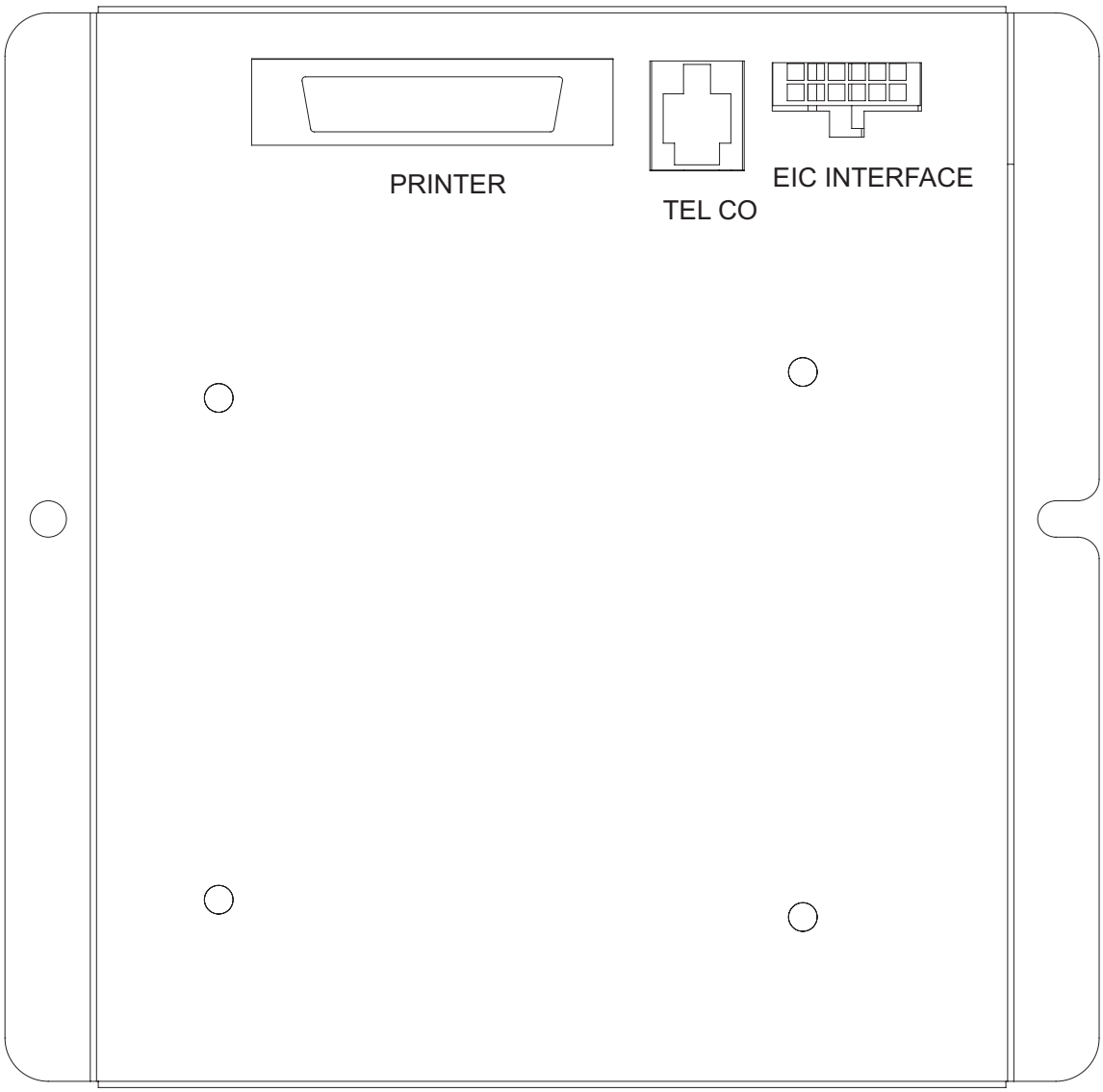

PRINTER: Optional parallel port printer to print credit reports.
TELCO: Outside telephone line. Connect to a dedicated telephone line for credit card processing and remote maintenance.
EIC Interface: This connects to P10 on the distribution panel.

Figure 12-2 EIC Left Side View

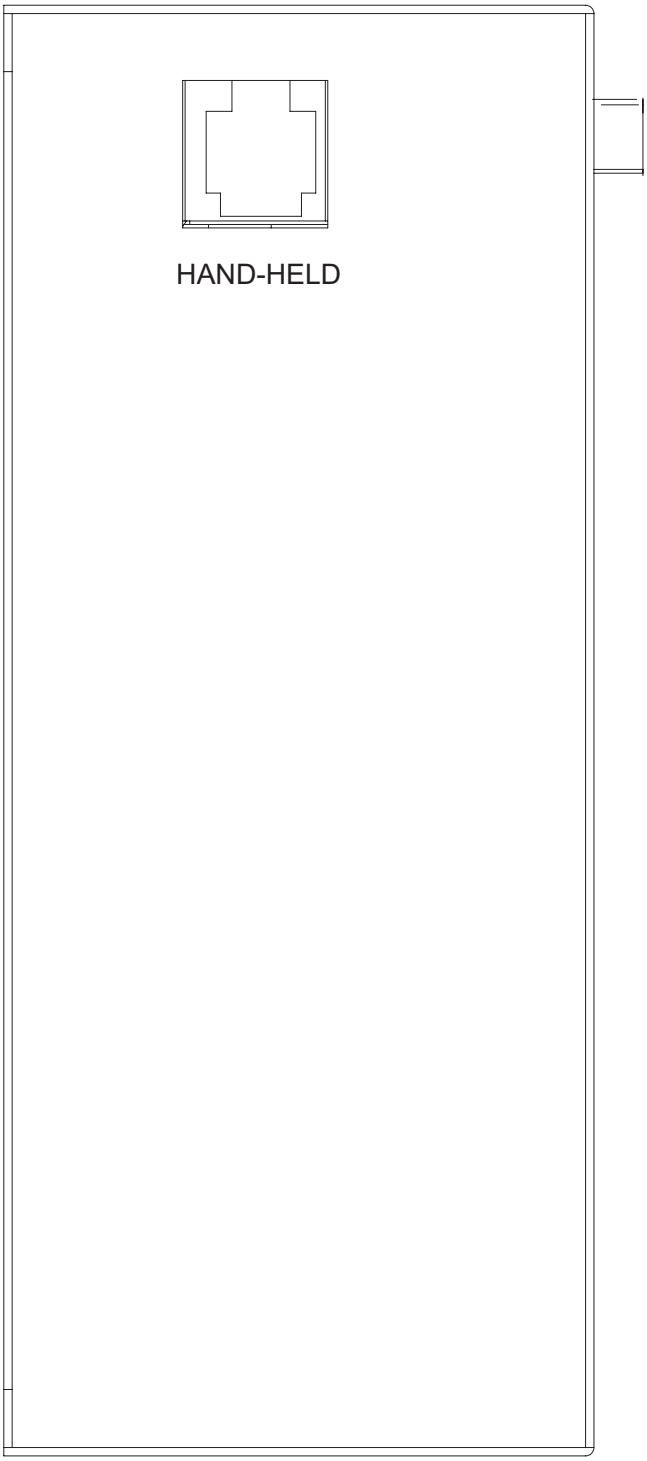

XIII. TOKENOTES®

A Tokenote® is a paper coupon that can be accepted by the Hamilton Validator. It is intended to give credit towards the wash price and not as a substitute for cash. Because of this, change will not be dispensed if the value of a Tokenote® exceeds the wash price. Likewise, the value of a Tokenote® cannot be refunded in cash.

> **It is important to realize that accepted Tokenotes® will issue a programmable amount of credit good towards all wash selections. Tokenote® use cannot be limited to a specific wash or subset of washes.**

These must be specially ordered from Hamilton Mfg. or your Hamilton Distributor.

When programming your machine to accept Tokenotes®, refer to the options listed below to help you decide which programming method to use.

Programming One or More Tokenotes® with the Same Value

PROGRAMMING THE STA VALIDATOR:

1. With the power on, check the operation of the validator. A dot flashing on the LED indicates it is operating normally.
2. Note the position of each switch on the DIP switch. (The DIP switch is located on the side of the validator.)
3. Set all 8 DIP switches to the OFF position. Then, starting with switch #8, slowly move the switches to the ON position, one switch at a time and in descending order (8, 7, 6, 5…). The LED should now be flashing the letter "P". This signifies that the validator is in the Tokenote® Programming Mode.
4. At this point, it is recommended to insert the CLEAR ALL Training Coupon, especially if this is the first time the validator is being programmed or if it has just been returned after being serviced. The CLEAR ALL Coupon will erase all previously trained Tokenotes® from the validator's memory but will not affect the controller's memory.
5. Insert one coded Tokenote® into the validator, making sure that it is accepted.
6. Repeat step 5 for each uniquely coded Tokenote® you wish to program. (Make sure that each Tokenote® is equal in value.) Up to 15 different codes can be programmed.
7. Starting with switch #1, slowly move the switches back to their original positions one at a time. This must be done in ascending order (1, 2, 3, 4…). A dot should now be flashing on the LED. Switch #2 must be in the OFF position in order to accept Tokenotes®.

PROGRAMMING THE HVX or XE VALIDATOR:

1. With the power on, check the operation of the validator. A dot flashing on the LED indicates it is operating normally.
2. Note the position of each switch on the DIP switch. (The DIP switch is located on the side of the validator.)
3. Set all 10 DIP switches to the OFF position. Then, starting with switch #10, slowly move the switches to the ON position, one switch at a time and in descending order (10, 9, 8, 7…). The LED should now be flashing the letter "P". This signifies that the validator is in the Tokenote® Programming Mode.
4. At this point, it is recommended to insert the CLEAR ALL Training Coupon, especially if this is the first time the validator is being programmed or if it has just been returned after being serviced. The CLEAR ALL Coupon will erase all previously trained Tokenotes® from the validator's memory but will not affect the controller's memory.
5. Insert one coded Tokenote® into the validator, making sure that it is accepted.
6. Repeat step 5 for each uniquely coded Tokenote® you wish to program. (Make sure that each Tokenote® is equal in value.) Up to 14 different codes can be programmed.
7. Starting with switch #1, slowly move the switches back to their original positions one at a time. This must be done in ascending order (1, 2, 3, 4…). A dot should now be flashing on the LED. Switch #2 must be in the OFF position in order to accept Tokenotes®.

Programming Two Or More Tokenotes® With Different Values

You will need:

1. **Training Coupons** - Training Coupons are used to program Tokenotes® into the Validator's memory. There are four different Training Coupons: Coupon #1, Coupon #2, Coupon #3, and Coupon #4.

2. **Clear All Coupon** – The CLEAR ALL Coupon is used to erase all previously trained Tokenotes® so that the validator will no longer accept any of those Tokenotes®.

The following table shows the different types of Training Coupons needed to successfully program Tokenotes® on an Autocashier.

Training Coupon Type	Usage
COUPON #1	Used to program credit for Coupon #1 discount
COUPON #2	Used to program credit for Coupon #2 discount
COUPON #3	Used to program credit for Coupon #3 discount
COUPON #4	Used to program credit for Coupon #4 discount
CLEAR ALL	Used to erase all trained Tokenotes® so that the Validator will no longer accept any Tokenotes®
NULL	Used to accept a particular Tokenote® without giving credit for it (such as an expired note)
CLEAR ONE	Used to erase one or more trained Tokenotes® so that the Validator will no longer accept cleared Tokenotes®

PROGRAMMING THE STA VALIDATOR:

1. With the power on, check the operation of the validator. A dot flashing on the LED indicates it is operating normally.
2. Note the position of each switch on the DIP switch. (The DIP switch is located on the side of the validator.)
3. Set all 8 DIP switches to the OFF position. Then, starting with switch #8, slowly move the switches to the ON position, one switch at a time and in descending order (8, 7, 6, 5…). The LED should now be flashing the letter "P". This signifies that the validator is in the Tokenote® Programming Mode.
4. At this point, it is recommended to insert the CLEAR ALL Training Coupon, especially if this is the first time the validator is being programmed or if it has just been returned after being serviced. The CLEAR ALL Coupon will erase all previously trained Tokenotes® from the validator's memory but will not affect the controller's memory.
5. Insert one coded Tokenote® into the validator, making sure that it is accepted.
6. Insert Training Coupon #1 into the validator, making sure that it is accepted.
7. Repeat steps 5 and 6 to program each uniquely coded Tokenote® of the same value.
8. To program a differently coded Tokenote® with a different payout, simply insert that Tokenote® into the validator, followed by Coupon #2. Repeat as needed, using Coupons #3-4 for each Tokenote® coded differently. Altogether, up to 15 different codes can be programmed.
9. Starting with Switch #1, slowly move the switches back to their original positions one at a time. This must be done in ascending order (1, 2, 3, 4…). A dot should now be flashing on the LED. Switch #2 must be in the OFF position in order to accept Tokenotes®.

PROGRAMMING THE HVX or XE VALIDATOR:

1. With the power on, check the operation of the validator. A dot flashing on the LED indicates it is operating normally.
2. Note the position of each switch on the DIP switch. (The DIP switch is located on the side of the validator.)
3. Set all 10 DIP switches to the OFF position. Then, starting with switch #10, slowly move the switches to the ON position, one switch at a time and in descending order (10, 9, 8, 7…). The LED should now be flashing the letter "P". This signifies that the validator is in the Tokenote® Programming Mode.
4. At this point, it is recommended to insert the CLEAR ALL Training Coupon, especially if this is the first time the validator is being programmed or if it has just been returned after being serviced. The CLEAR ALL Coupon will erase all previously trained Tokenotes® from the validator's memory but will not affect the controller's memory.
5. Insert one coded Tokenote® into the validator, making sure that it is accepted.

6. Insert Training Coupon #1 into the validator, making sure that it is accepted.
7. Repeat steps 5 and 6 to program each uniquely coded Tokenote® of the same value.
8. To program a differently coded Tokenote® with a different payout, simply insert that Tokenote® into the validator, followed by Coupon #2. Repeat as needed, using Coupons #3-4 for each Tokenote® coded differently. Altogether, up to 14 different codes can be programmed.
9. Starting with switch #1, slowly move the switches back to their original positions one at a time. This must be done in ascending order (1, 2, 3, 4…). A dot should now be flashing on the LED. Switch #2 must be in the OFF position in order to accept Tokenotes®.

When programming more than one Tokenote®, it is important to keep the following in mind:

- Up to 14 differently coded Tokenotes® can be programmed at one time into the HVX or XE Validator or 15 different coded Tokenotes® for the STA Validator.
- It is possible to use one coupon to program several differently coded Tokenotes®, as long as they are of equal value. (For example, Coupon #1 can be used to program 3 differently coded Tokenotes® with a value of $5 each.)

The same Tokenote® code cannot be programmed into different categories.

- Tokenotes® may be programmed into the four COUPON DISCOUNTS categories (Coupon #1-4) and the TOKENOTE® VALUE? category all at the same time (allowing a total of five categories). Tokenotes® may be distributed evenly throughout these categories, or spread out using any combination, as long as the Tokenote® values are the same for each category.

Voiding Tokenotes®

To void unwanted Tokenotes® it is necessary to have three additional Training Coupons; NULL, VENDING CLEAR ONE, and CLEAR ALL. The use of any Tokenote® can be eliminated by one of the three methods described below.

➢ **To continue to accept, but no longer give credit for a particular Tokenote®.** (Erase a value)

PROGRAMMING THE STA VALIDATOR:

1. With the power on, check the operation of the validator. A dot flashing on the LED indicates it is operating normally.
2. Note the position of each switch on the DIP switch. (The DIP switch is located on the side of the validator.)
3. Set all 8 DIP switches to the OFF position. Then, starting with switch #8, slowly move the switches to the ON position, one switch at a time and in descending order (8, 7, 6, 5…). The LED should now be flashing the letter "P". This signifies that the validator is in the Tokenote® Programming Mode.
4. Insert the Tokenote® you no longer wish to credit into the validator, making sure that it is accepted.

5. Insert the NULL Training Coupon into the validator, making sure that it is accepted.
6. Repeat steps 4-5 for each Tokenote® that you no longer wish to give credit for.
7. Starting with switch #1, slowly move the switches back to their original positions one at a time. This must be done in ascending order (1, 2, 3, 4…). A dot should now be flashing on the LED.

PROGRAMMING THE HVX or XE VALIDATOR:

1. With the power on, check the operation of the validator. A dot flashing on the LED indicates it is operating normally.
2. Note the position of each switch on the DIP switch. (The DIP switch is located on the side of the validator.)
3. Set all 10 DIP switches to the OFF position. Then, starting with switch #10, slowly move the switches to the ON position, one switch at a time and in descending order (10, 9, 8, 7…). The LED should now be flashing the letter "P". This signifies that the validator is in the Tokenote® Programming Mode.
4. Insert the Tokenote® you no longer wish to credit into the validator, making sure that it is accepted.
5. Insert the NULL Training Coupon into the validator, making sure that it is accepted.
6. Repeat steps 4-5 for each Tokenote® that you no longer wish to give credit for.
7. Starting with switch #1, slowly move the switches back to their original positions one at a time. This must be done in ascending order (1, 2, 3, 4…). A dot should now be flashing on the LED.

➢ **To stop accepting a particular Tokenote®** (Erase any record that the Tokenote® was ever programmed)

PROGRAMMING THE STA VALIDATOR:

1. With the power on, check the operation of the validator. A dot flashing on the LED indicates it is operating normally.
2. Note the position of each switch on the DIP switch. (The DIP switch is located on the side of the validator.)
3. Set all 8 DIP switches to the OFF position. Then, starting with switch #8, slowly move the switches to the ON position, one switch at a time and in descending order (8, 7, 6, 5…). The LED should now be flashing the letter "P". This signifies that the validator is in the Tokenote® Programming Mode.
4. Insert the Tokenote® you wish to clear into the validator, making sure that it is accepted.
5. Insert the VENDING CLEAR ONE Training Coupon into the validator, making sure that it is accepted.
6. Repeat steps 4-5 for each Tokenote® you wish to void.

7. Starting with switch #1, slowly move the switches back to their original positions one at a time. This must be done in ascending order (1, 2, 3, 4…). A dot should now be flashing on the LED.

PROGRAMMING THE HVX or XE VALIDATOR:

1. With the power on, check the operation of the validator. A dot flashing on the LED indicates it is operating normally.
2. Note the position of each switch on the DIP switch. (The DIP switch is located on the side of the validator.)
3. Set all 10 DIP switches to the OFF position. Then, starting with Switch #10, slowly move the switches to the ON position, one switch at a time and in descending order (10, 9, 8, 7…). The LED should now be flashing the letter "P". This signifies that the validator is in the Tokenote® Programming Mode.
4. Insert the Tokenote® you wish to clear into the validator, making sure that it is accepted.
5. Insert the VENDING CLEAR ONE Training Coupon into the validator, making sure that it is accepted.
6. Repeat steps 4-5 for each Tokenote® you wish to void.
7. Starting with switch #1, slowly move the switches back to their original positions one at a time. This must be done in ascending order (1, 2, 3, 4…). A dot should now be flashing on the LED.

➢ **To stop accepting all Tokenotes® already programmed into the validator.** (This erases any record that the Tokenotes® were ever programmed)

PROGRAMMING THE STA VALIDATOR:

1. With the power on, check the operation of the validator. A dot flashing on the LED indicates it is operating normally.
2. Note the position of each switch on the DIP switch. (The DIP switch is located on the side of the validator.)
3. Set all 8 DIP switches to the OFF position. Then, starting with switch #8, slowly move the switches to the ON position, one switch at a time and in descending order (8, 7, 6, 5…). The LED should now be flashing the letter "P". This signifies that the validator is in the Tokenote® Programming Mode.
4. Insert the CLEAR ALL Training Coupon into the validator, making sure that it is accepted.
5. Starting with switch #1, slowly move the switches back to their original positions one at a time. This must be done in ascending order (1, 2, 3, 4…). A dot should now be flashing on the LED.

PROGRAMMING THE HVX or XE VALIDATOR:

1. With the power on, check the operation of the validator. A dot flashing on the LED indicates it is operating normally.
2. Note the position of each switch on the DIP switch. (The DIP switch is

located on the side of the validator.)

3. Set all 10 DIP switches to the OFF position. Then, starting with switch #10, slowly move the switches to the ON position, one switch at a time and in descending order (10, 9, 8, 7…). The LED should now be flashing the letter "P". This signifies that the validator is in the Tokenote® Programming Mode.
4. Insert the CLEAR ALL Training Coupon into the validator, making sure that it is accepted.
5. Starting with switch #1, slowly move the switches back to their original positions one at a time. This must be done in ascending order (1, 2, 3, 4…). A dot should now be flashing on the LED.

PROGRAMMING TOKENOTES WITH THE HVX AND XE VALIDATORS

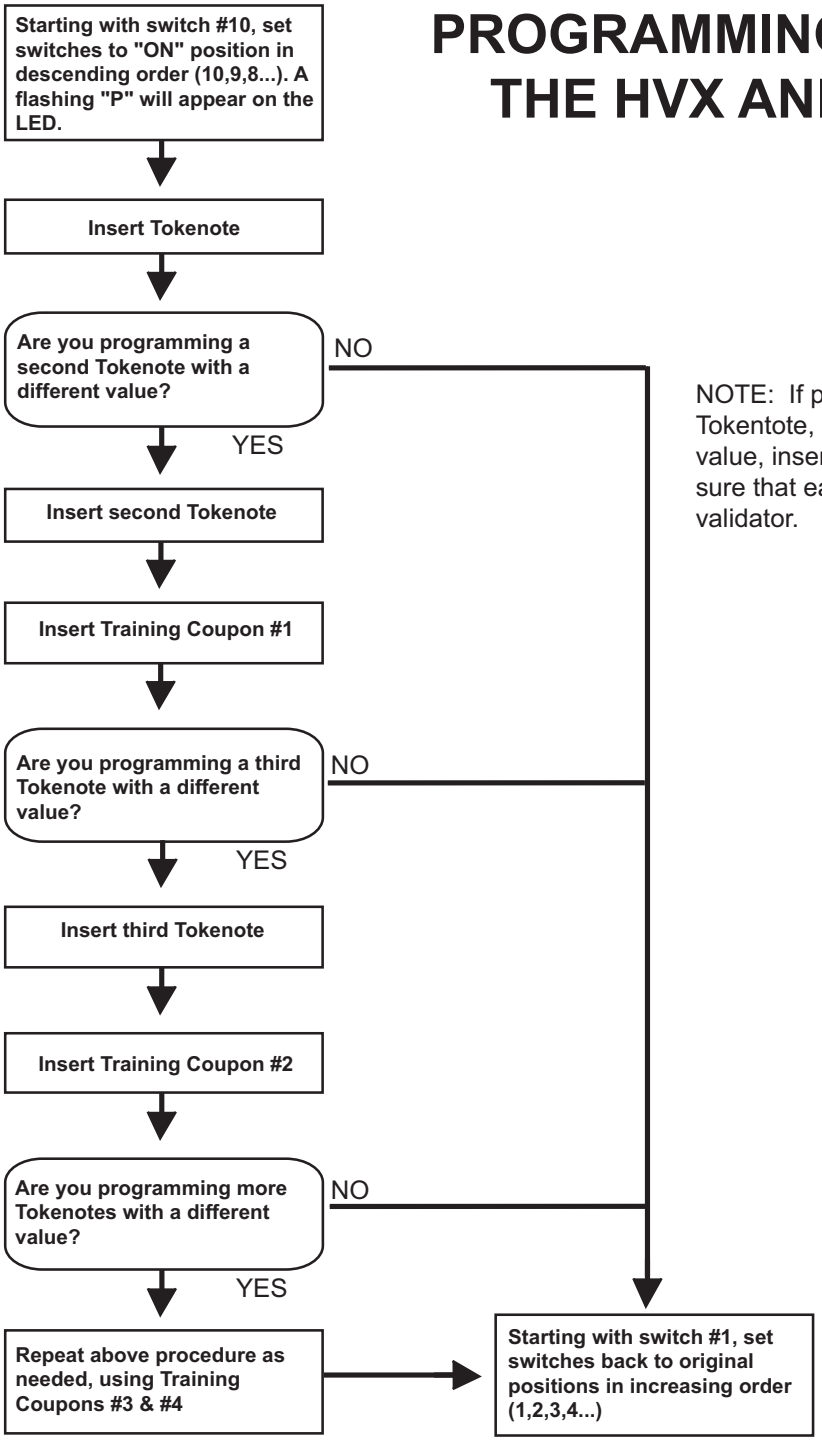

NOTE: If programming more than one Tokentote, coded differently but of equal value, insert one right after the other. Make sure that each Tokenote is accepted by the validator.

PROGRAMMING TOKENOTES WITH THE STA VALIDATOR

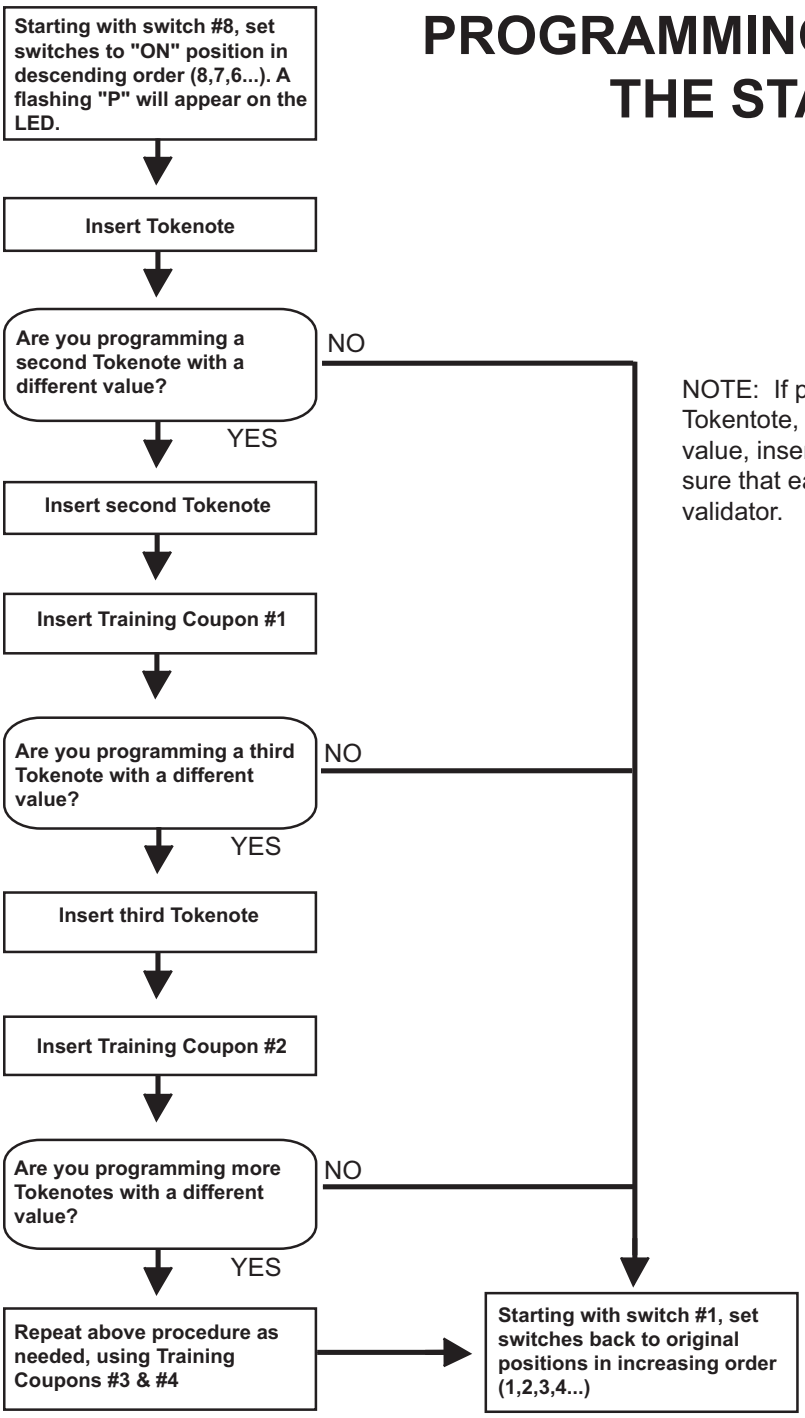

NOTE: If programming more than one Tokentote, coded differently but of equal value, insert one right after the other. Make sure that each Tokenote is accepted by the validator.

Appendix A
Default Settings

TOKEN COIN MODE	MULTIPLE CREDITS
TOKEN COIN VALUE	$1.00
TOKENOTE MODE	MULTIPLE CREDITS
TOKENOTE VALUE	$1.25
COUPON MODE	SINGLE VALUE
COUPON #1 VALUE	$0.00
COUPONE #2 VALUE	$0.00
COUPON #3 VALUE	$0.00
COUPON #4 VALUE	$0.00
ITEM #1 PRICE	$1.00
ITEM #2 PRICE	$2.00
ITEM #3 PRICE	$3.00
ITEM #4 PRICE	$4.00
ITEM #1 NAME	WASH
ITEM #2 NAME	WASH & WAX
ITEM #3 NAME	WASH, WAX & DRY
ITEM #4 NAME	SUPER WASH
CUSTOM NAME #1	BLANK
CUSTOM NAME #2	BLANK
CUSTOM NAME #3	BLANK
CUSTOM NAME #4	BLANK
CUSTOM NAME #5	BLANK
CUSTOM NAME #6	BLANK
CUSTOM NAME #7	BLANK
CUSTOM NAME #8	BLANK
PROCEED MESSAGE #1	THANK YOU
PROCEED MESSAGE #2	PLEASE DRIVE AHEAD
PROCEED MESSAGE #3	"--NOT USED--"
PROCEED MESSAGE #4	"--NOT USED--"
WELCOME MESSAGE #1	WELCOME
WELCOME MESSAGE #2	SELECT ITEM PLEASE
WELCOME MESSAGE #3	"--NOT USED--"
WELCOME MESSAGE #4	"--NOT USED--"

Default Settings (cont.)

EXTERNAL DISPLAY MESSAGES	"--NOT USED--"
SET DATE & TIME	SUN 01-01-00 12:00 A
EMPTY MODE	OUT OF SERVICE
SET HOPPER CONTENTS	QUARTER
BUILD MODE	LIMIT ENABLED
PAY DEFAULT	OUT OF SERVICE
SET UPGRADE	DISABLED
BUTTON MAPPING	ENABLED
RECEIPT HEADERS	(All) NOT USED
RECEIPT MODE	NO RECEIPT
PRINTER MODEL	LPT
POS TYPE	POS 4000
SET UNIT NUMBER	#2
SET ITEM PASSWORD	(ALL) 00
SET QUE MODE	SUSPEND VEND PULSE
SET WELCOME DELAY	10 SECONDS
VEND DURATION	2.0 SECONDS

Appendix B
Item Names

WASH
WASH ONLY
WAX
POLISH WAX
RINSE
BRUSH
TRIPLE FOAM
DRY
SUPER WASH
DELUXE WASH
SUPER RINSE
WASH & DRY
WASH & RINSE
BASIC WASH
SPOT FREE RINSE
PRE-RINSE
CLEAR COAT RINSE
SIMONIZE WAX
PREMIUM WASH
WASH, WAX, & RINSE
WASH & WAX
DOUBLE WASH & WAX
DOUBLE WASH & TIRE
DOUBLE WASH, RINSE
WASH & POLISH WASH
WASH & HOT WAX
WASH, HOT WAX, DRY
WASH, WAX, & DRY
WASH & SIDEWALL
WASH & TIRE
WASH, WAX, & TIRE
WASH & WHITEWALL
UNDERCARRIAGE
UNDER-BODY SPRAY
WASH & UNDER-SPRAY
ULTRA WASH
ULTIMATE WASH
CUSTOM NAME 1-8

Appendix C
Welcome Messages

--NOT USED--
CURRENT DAY DATE & TIME
WELCOME
SELECT ITEM PLEASE
PLEASE CHOOSE ITEM
PRESS ITEM BUTTON
MAKE ITEM SELECTION
SELECT DESIRED WASH
ENTER CODE
OR ENTER CODE
ENTER TICKET CODE
USE CODE OR CASH
OR SELECT ITEM
SELECT ITEM
SELECT SERVICE
OR DEPOSIT MONEY
MAKE SELECTION
PAY IN CASH OR TOKEN
USE CASH OR TOKEN
SELECT WASH
INSERT CREDIT CARD
AND REMOVE QUICKLY
(BLANK)

Appendix D
Proceed Prompts

NOT USED
THANK YOU
PLEASE DRIVE AHEAD
PUT CAR IN NEUTRAL
DO NOT BRAKE/STEER
PLEASE PROCEED
(BLANK)
DRIVE FORWARD

Appendix E
Bill Denomination Mylar
Installation Instructions

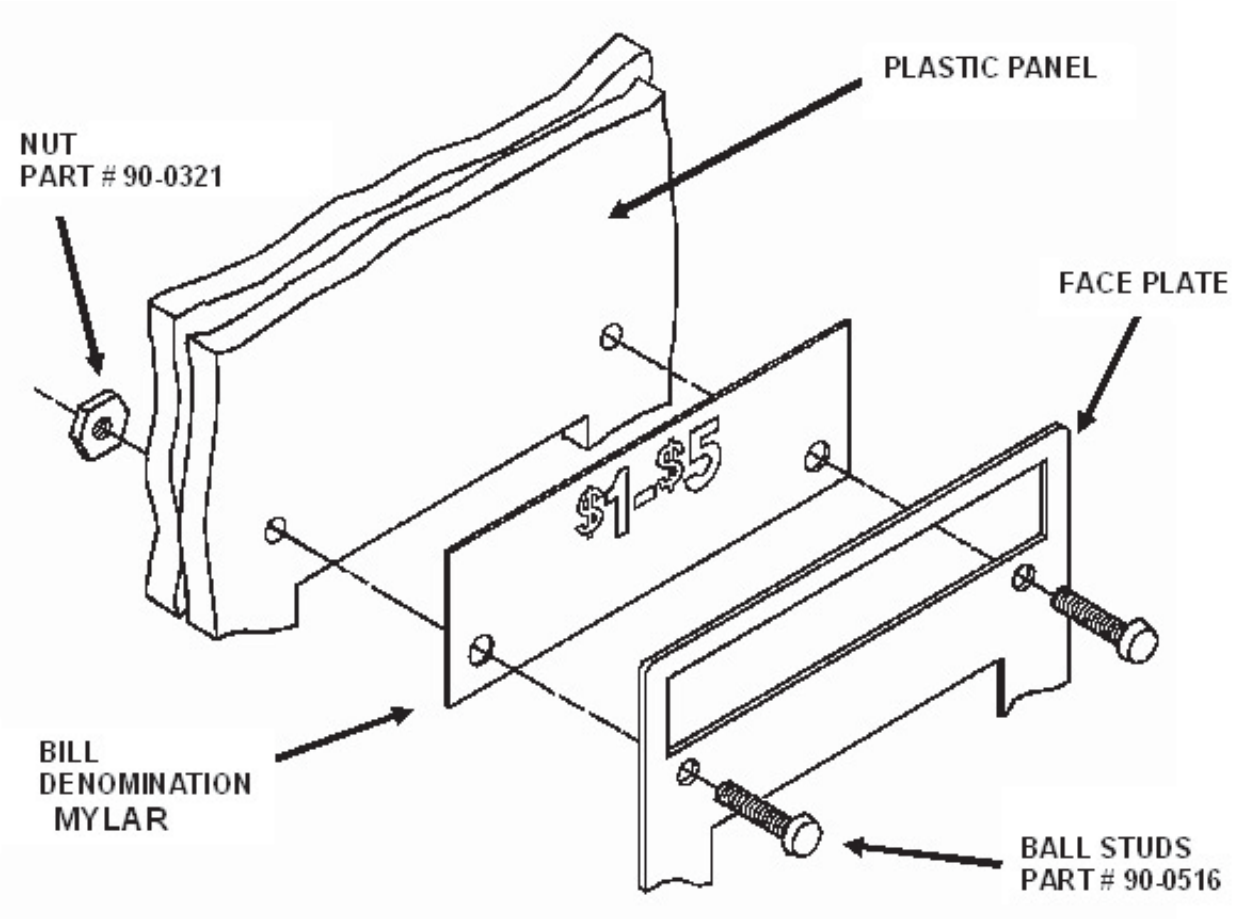

1. Loosen and remove the nuts from the ball studs.
2. Remove the ball studs from the face plate.
3. Insert the bill denomination mylar between the face plate and the plastic panel until the holes in the bill denomination mylar line up with the holes in the faceplate.
4. Reinsert the ball studs into the front of the face plate, through the bill denominatin mylar and the plastic panel.
5. Replace the nuts on the ball studs and tighten.

LIMITED WARRANTY AGREEMENT OF HAMILTON MANUFACTURING CORP.

Hamilton Manufacturing Corp., an Ohio Corporation, ("Seller") warrants to Purchaser that all new equipment shall be free from defects in material and factory workmanship for a period of one (1) year from the original shipping date. Hamilton Manufacturing Corp. further warrants if any part of said new equipment in Seller's sole opinion, requires replacement or repair due to a defect in material or factory workmanship during said period, Seller will repair or replace said new equipment. Purchaser's remedies and the liabilities and obligations of Seller herein shall be limited to repair or replacement of the equipment as Seller may choose, and Seller's obligation to remedy such defects shall not exceed the Purchaser's original cost for the equipment. Purchaser EXPRESSLY AGREES this is the EXCLUSIVE REMEDY under this warranty. There are no other express or implied warranties which extend beyond the face hereof. All warranty repair service must be performed by either a Factory Trained Service Representative or **HAMILTON MANUFACTURING CORP., 1026 Hamilton Drive, Holland, Ohio 43528 PHONE (419) 867-4858 or (800) 837-5561, FAX (419) 867-4867.**

The limited warranty for new equipment is conditioned upon the following:

1. The subject equipment has not, in the Seller's sole opinion, been subjected to: accident, abuse, misuse, vandalism, civil disobedience, riots, acts of God, natural disaster, acts of war or terrorism.
2. The Seller shall not be liable for any expense incurred by Purchaser incidental to the repair or replacement of equipment and Purchaser shall assume full responsibility for any freight or shipping charges.
3. The coverage of this warranty shall not extend to expendable parts.
4. Purchaser shall have a warranty registration card on file with Seller prior to any claim in order for warranty protection to apply.
5. No warranty coverage is applicable to any equipment used for currency other than that specified at the time of the purchase.
6. Seller expressly disclaims any warranty that counterfeit currency will not activate said equipment.
7. Seller expressly disclaims any warranty for any losses due to bill manipulation or theft or loss of cash under any circumstances.

Seller further warrants all repair or service work performed by a factory trained representative or Hamilton Manufacturing Corp. for a period of ninety (90) days from the date the repair or service work was performed. Purchaser's remedies and the liabilities and obligations of Seller herein shall be limited to repair or replacement of equipment as Seller may choose, and Seller's obligation to remedy such defects shall not exceed the Purchaser's depreciated value of the equipment. Purchaser EXPRESSLY AGREES this is an EXCLUSIVE REMEDY under this warranty. There are no other express or implied warranties on repair or service work performed by a factory trained representative or Hamilton Manufacturing Corp. which extend beyond the face hereof.

(See next page for additional provisions)

The limited warranty for repair and service work is conditioned upon the following:

1. The subject equipment has not, in the Seller's sole opinion, been subjected to: accident, abuse, misuse, vandalism, civil disobedience, riots, acts of God, natural disaster, acts of war or terrorism.
2. The Seller shall not be liable for any expense incurred by Purchaser incidental to the repair or replacement of equipment and Purchaser shall assume full responsibility for any freight or shipping charges.
3. The coverage of this warranty shall not extend to expendable parts.
4. Purchaser shall have a warranty registration card on file with Seller prior to any claim in order for warranty protection to apply.
5. No warranty coverage is applicable to any equipment used for currency other than that specified at the time of the purchase.
6. Seller expressly disclaims any warranty that counterfeit currency will not activate said equipment.
7. Seller expressly disclaims any warranty for any losses due to bill manipulation or theft or loss of cash under any circumstances.
8. No person or entity other than a factory trained representative or Hamilton Manufacturing Corp. has performed or attempted to perform the subject repair or service.

THIS AGREEMENT IS MADE WITH THE EXPRESS UNDERSTANDING THAT THERE ARE NO IMPLIED WARRANTIES THAT THE EQUIPMENT SHALL BE MERCHANTABLE, OR THAT THE GOODS SHALL BE FIT FOR ANY PARTICULAR PURPOSE. PURCHASER HEREBY ACKNOWLEDGES THAT IT IS NOT RELYING ON THE SELLER'S SKILL OR JUDGMENT TO SELECT OR FURNISH EQUIPMENT SUITABLE FOR ANY PARTICULAR PURPOSE AND THAT THERE ARE NO WARRANTIES WHICH EXTEND BEYOND THAT WHICH IS DESCRIBED HEREIN.

The Purchaser agrees that in no event will the Seller be liable for direct, indirect, or consequential damages or for injury resulting from any defective or non-conforming new, repaired or serviced equipment, or for any loss, damage or expense of any kind, including loss of profits, business interruption, loss of business information or other pecuniary loss arising in connection with this Limited Warranty Agreement, or with the use of, or inability to use the subject equipment regardless of Sellers knowledge of the possibility of the same.

Hamilton Manufacturing Corporation

1026 Hamilton Drive
Holland, OH 43528

Sales Phone: (888) 723-4858 **Sales Fax:** (419) 867-4850
Customer Service Phone: (800) 837-5561 **Customer Service Fax:** (419) 867-4857
Advanced Systems Phone: (866) 296-3365 **Advanced Systems Fax:** (419) 867-4857
Parts Phone: (866) 835-1721 **Parts Fax:** (419) 867-4867
Website: http:\\www.hamiltonmfg.com
Email Addresses:
service@hamiltonmfg.com
sales@hamiltonmfg.com
parts@hamiltonmfg.com
info@hamiltonmfg.com